Classes of Electron Guns and Injectors

- The objective of this lecture is to classify and describe the various types of electron guns and injectors. This Lecture describes some historical as well as contemporary examples of guns and injectors.
- The student will learn about the different types of guns and injectors, and their performance properties. And be able to match an injector design with its optimum application.

Emission & Initial Acceleration

- Thermionic cathode
  - Gridded-DC gun
  - DC gun
  - NCRF gun
- Photo-electric cathode
  - DC gun
  - NCRF gun
  - SRF gun
- Field-emission cathode
  - Pulsed-DC
  - RF
  - Pulsed-DC+ NCRF

Beam Conditioning

- Emittance compensation
  - Solenoid focusing
  - RF focusing
  - Slice phase space matching
- Ballistic compression
  - Fundamental & sub-harmonic RF
  - Inductive linac
- Magnetic compression
  - RF harmonic linearizing
- RF compression
  - Solenoid focusing
  - Tapered RF phase bunching

Acceleration

- Capture into booster
- Emittance preservation
- Longitudinal phase space compensation
- Chirping for bunch compressors

Thermionic Injectors (1)

- The first injectors for free electron lasers were all thermionic and the first injector specifically built for an fel was a gridded thermionic gun followed by stages of ballistic compressors to reduce the gun bunch length from 1 ns to 12 ps. The basic configuration is shown in the next slide. The injector was ~3 meters long to accommodate the components and drift lengths for compression. Typical gun voltages were between 50 to 100 kV and the cathode grid was biased by a tuned, delay line similar to that used in a pulse forming network. In order to increase the charge captured into each rf bucket, the bunchers take the charge the gun emits in a ns and compresses it into a 12 ps long bunch. This is done by beginning with a low enough rf frequency to produce a linear energy chirp on the 1ns long beam. In this example the 12th sub-harmonic is used as it has a period of 9 ns, thus its rf waveform is fairly linear near the zero crossing over the 1 ns beam. The second stage is another rf buncher cavity now at 1/3rd harmonic followed by a drift length to produce a 50 ps long bunch at the entrance to the TPV buncher.

Thermionic Injectors(2)

1300 MHz buncher

Cavity	β	E, MV/m
1	0.55	5.9
2	0.66	6.9
3	0.78	7.9
4	1.00	16.3
5	1.00	15.8
6	1.00	15.3

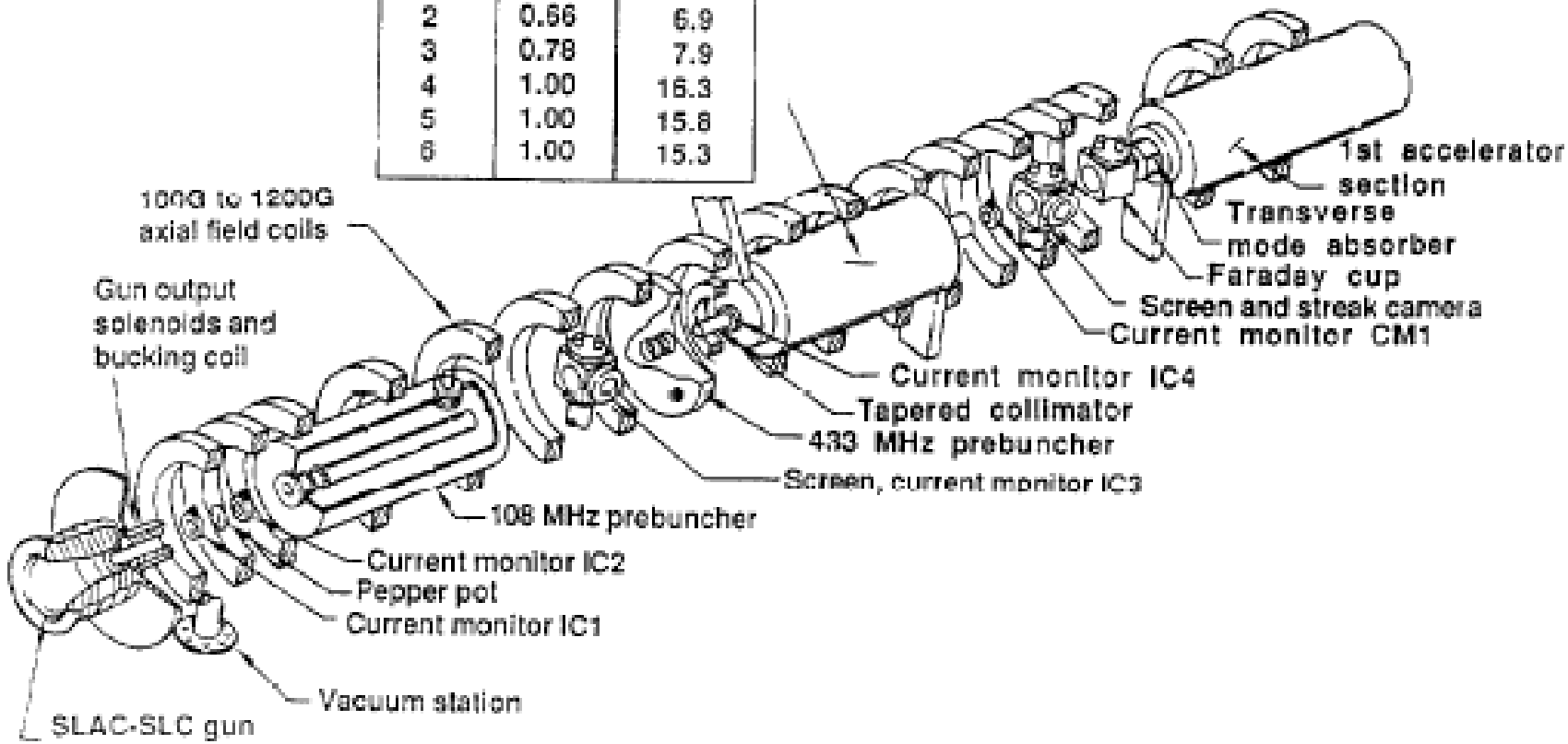

Figure 1. Double subharmonic injector

Schematic of the Double Sub-Harmonic Injector

- **The double sub-harmonic thermionic injector produces a short high current bunch by compressing a 1 ns long down to 10 ps by ballistic bunching in two stages with the 1/12 and 1/3 harmonics followed by a tapered phase velocity cavity at the fundamental frequency to rf compress the bunch to it's final length. The entire system is surrounded by axial field coils to control the emittance growth.**

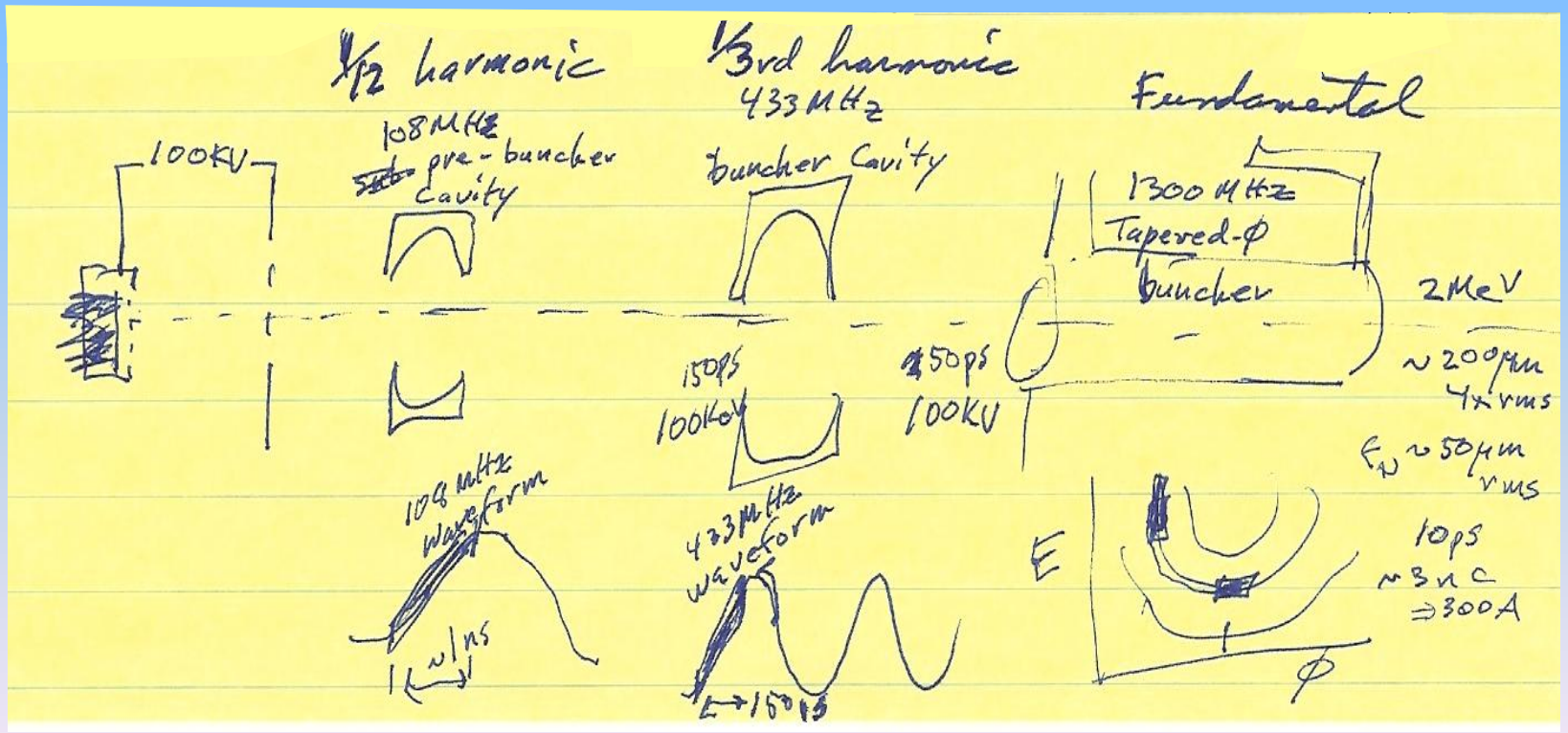

Thermionic Injector Specifications

- The beam quality for this type of injector is illustrated by the published parameters for the NLCTA and CLIC drive beam injectors as reproduced in Table 1. (See: A.D. Yeremian, R.H. Miller and J.W. Wang, "Next linear colider test accelerator injector design and status", SLAC-PUB-6610, August 1994; A. D. Yeremian et al., "CTF3 drive-beam injector design", SLAC-PUB-9572, November 2002.) The beam emittance is generally 10 or more times that from the rf photocathode gun.

TABLE 1

Electron Beam Requirements and Simulation Results for the NLCTA Injector

Parameter	Requirement	Simulation *Collimation*	
		No	*Yes*
Total transmission gun to end of injector	—	0.84	0.64
Capture in 15° X--band (%)	—	74	63
I_A due to charge in 15° X--band (A)	1.5	3.3	2.8
Charge / μbunch (nc)	0.1	0.3	0.25
μbunch width FWHM (degrees °X-band)	10	5	5
ε_{nrms} (m-rad)	$< 5 \times 10^{-5}$	1×10^{-5}	6×10^{-6}
ΔE/E FWHM (%)	< 0.5	0.3	0.3

FIGURE 3

Table 1. Electron Beam Parameters from the CTF3 gun.

Parameter	Unit	Grid limited		Space Ch. limited	
I	Amp	5	7	9.3	10.4
V	keV	140	140	140	150
$\varepsilon_{edge,N}$	mm-mrad	26	20	13	14

SPring8 SCSS Injector (1)

- The contemporary version of the thermionic injector is represented by the system for the SPring8 Compact SASE Source (SCSS) XFEL. Due to the increased emittance from a grid, this cathode emits continuously during the 500kV HV pulse with the pulse structure determined by a chopper cavity. The test stand for the gun is shown, consisting of the HV tank and the diagnostics beam line. The injector system architecture is reminiscent of the previous generation of thermionic injector described earlier. Replacing the grid with a chopper eliminates a large source of emittance from the grid itself. (see Pierce and CLIC paper) This design also uses two stages of sub-harmonic bunchers but does not have a rf/velocity compressor cavity.

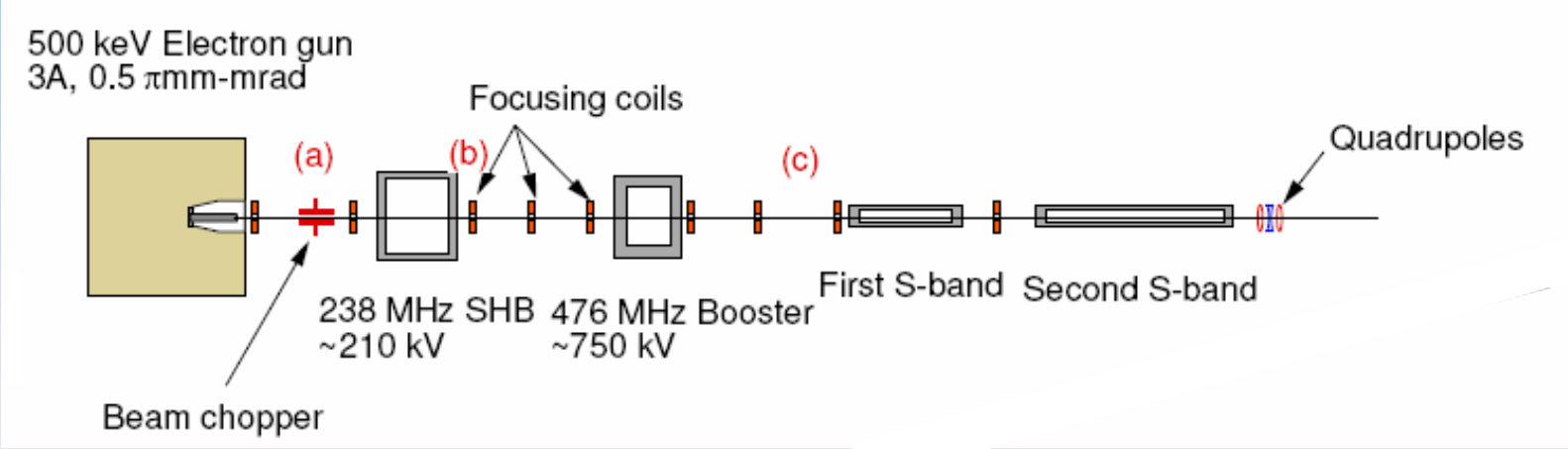

SCSS Thermionic Gun

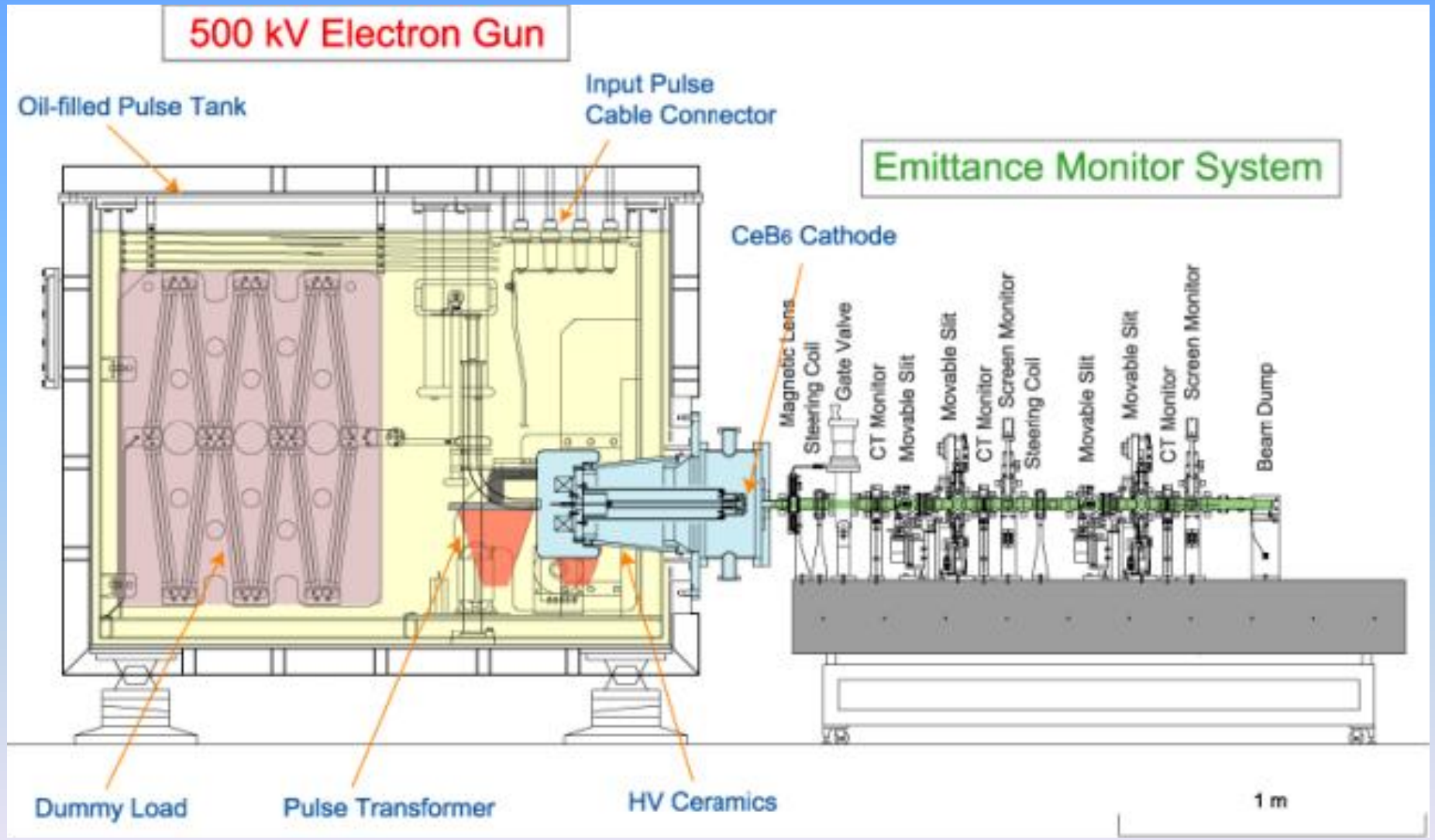

SPring8 SCSS Gun Parameters

Table 1: Gun Parameters

Beam Energy	500 keV
Peak Current	1~3A
Pulse Width (FWHM)	2 μsec
Repetition Rate	60 Hz
Cathode Temperature	1400~1600 deg.C
Cathode Diameter	3mm
Theoretical Thermal Emittance (rms)	0.4 πmm.mrad
Measured Normalized Emittance (rms, 90% particles)	0.6 πmm.mrad [7]

- **"Graphite Heat Optimized for a Low-Emittance CeB6 Cathode," K. Togawa et al., Proc. of PAC07**

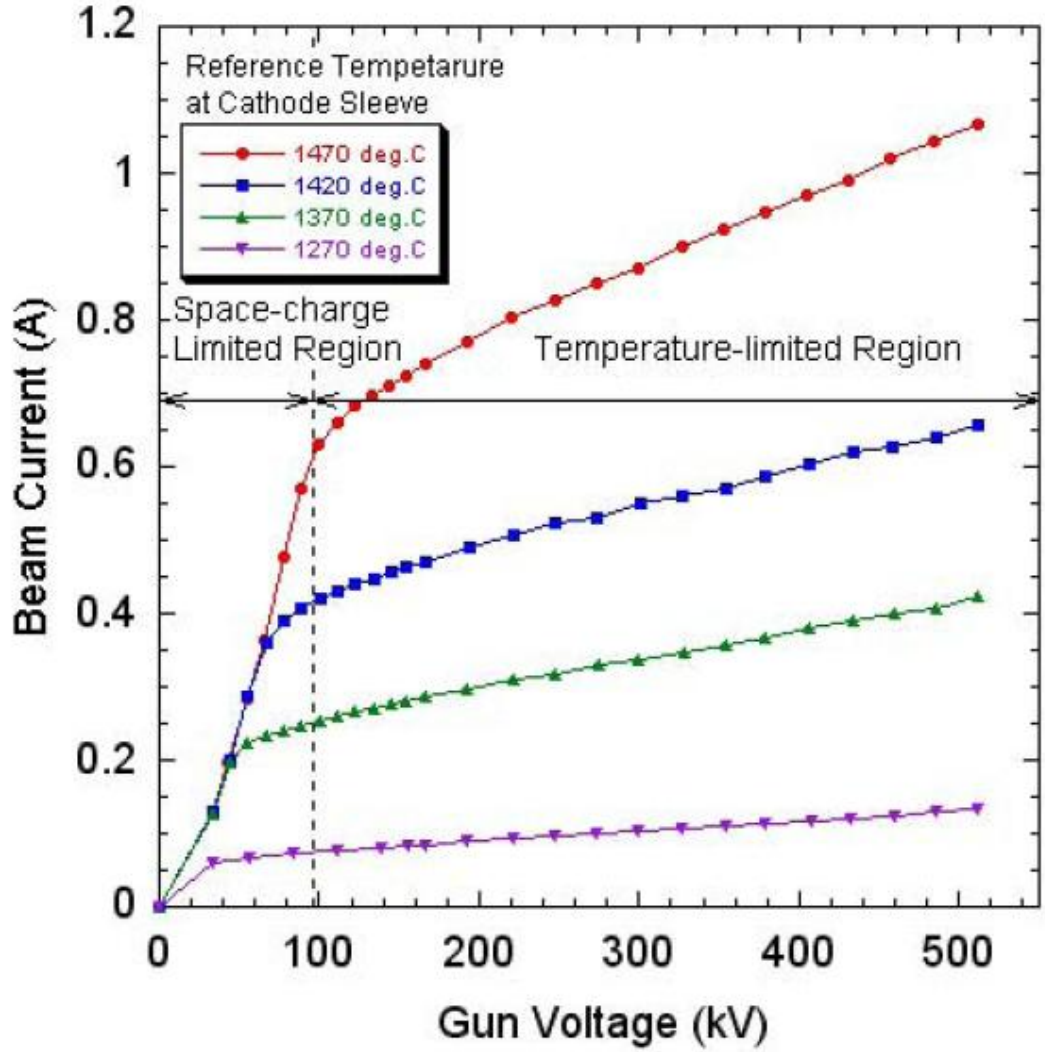

Figure 5: Beam current –voltage characteristics of the CeB_6 electron gun.

SPring8 SCSS Injector Parameters

- Prototype injector used for FEL experiments operates at 140 to 270 pC, 60 Hz.

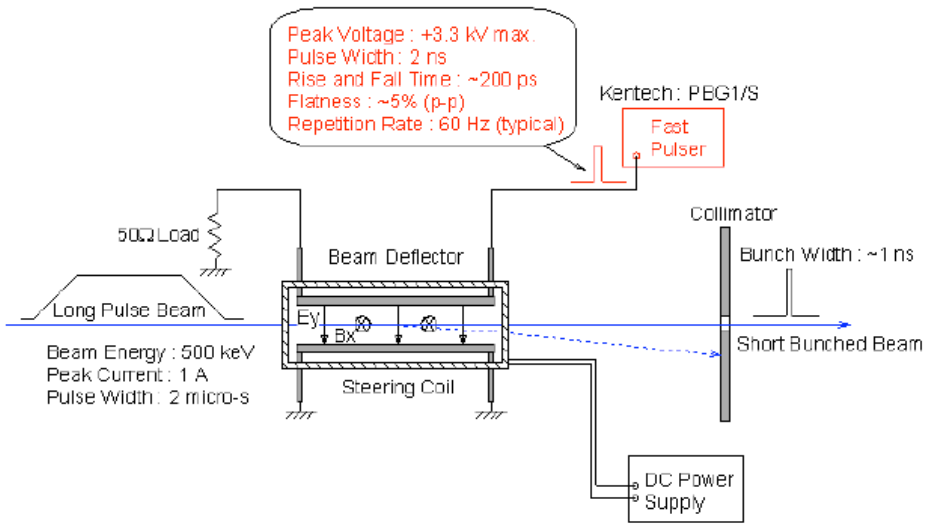

Fig. 3: Schematic drawing of beam deflector.

- "Low Emittance Injector at SCSS," H. Tanaka et al., Proc. of FEL 2006

Table 2: Estimation of normalized emittance

Beam Energy [MeV]	Norm.Emittance (ε_x, ε_y) [πmm.mrad]	Calculation (ε_x, ε_y) [πmm.mrad]
0.5(bef.deflector)	(0.6, -)	-
0.5(aft.deflector)	(1, -)	-
50	(3, 3)	(2.8, 2.6)
250	(4, 2)	(2.3, 2.3)

DC Photocathode Guns and GaAs(Cs) Cathodes

- The DC photocathode gun was first developed as a source of polarized electrons for high-energy physics experiments. The cathode material was and remains cesciated gallium arsenide, GaAs(Cs), which produces polarized electrons with the same helicity as that of the incident laser photons. Polarizations greater than 90 percent have been achieved from sophisticated wafers consisting of alternating layers of epitaxially grown structures gallium and arsenic. These negative electron affinity (NEA) cathodes have high quantum yields of a few percent at near IR and visible wavelengths, and the lowest measured thermal emittances.
- The disadvantages of GaAs(Cs) are their sensitivity to vacuum contamination, requiring better than 10-11torr, and slow emission time. The electron temporal response exhibits a long tail of 10's of ps on the falling side of the pulse, which is dependent upon how far from within the material the electrons are extracted. The slower temporal response also related to the cathode's charge limit. The low electron mobility limits the flow of electrons needed to replenish the emitted electrons. The DC gun is well suited to this type of cathode because, firstly it has a very open and easily vacuum pumped volume, and secondly the accelerating fields are truly constant.

GaAs(Cs) Thermal Emittance

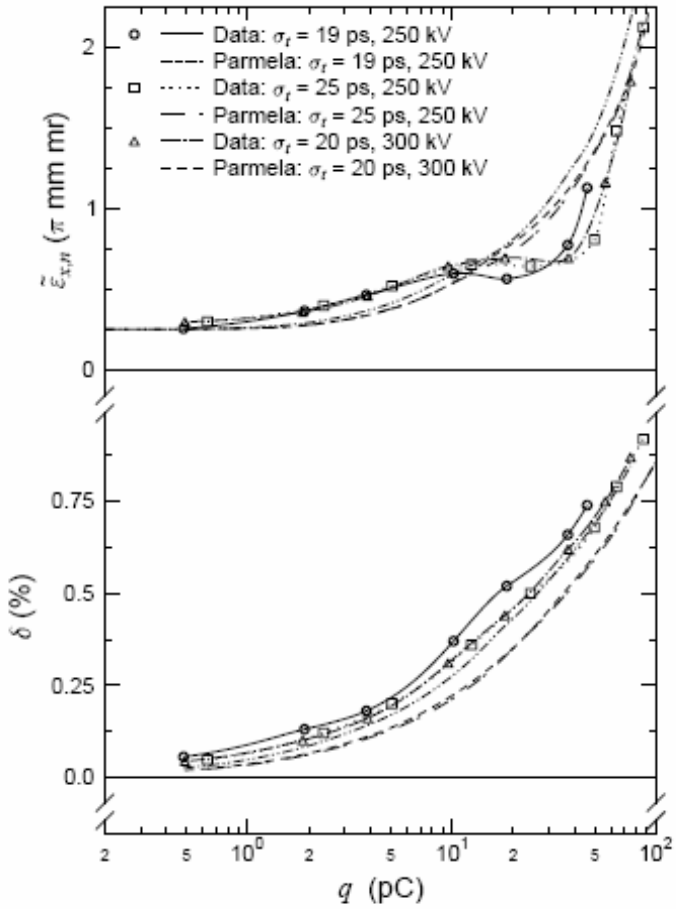

Figure 2: Results for measurements with R=1.06 mm showing the effects of pulse length and accelerating potential (cathode field) variation.

- A unique property of the HVDC gun with a GaAs(Cs) cathode is its low thermal emittance. An experiment performed with careful attention to detail measured the emittance as a function of bunch charge. The data and analysis of Enge et al. is shown. The thermal emittance is obtained asymptotically as the charge go to zero. The experimental value of 0.25microns/mm (or normalized divergence of 0.25 mrad) is the lowest experimental value.

- B.M. Dunham et al, “Emittance Measurements for the Illinois/CEBAF Polarized Electron Source, Proc. PAC95.

Jefferson Lab DC Photocathode Gun

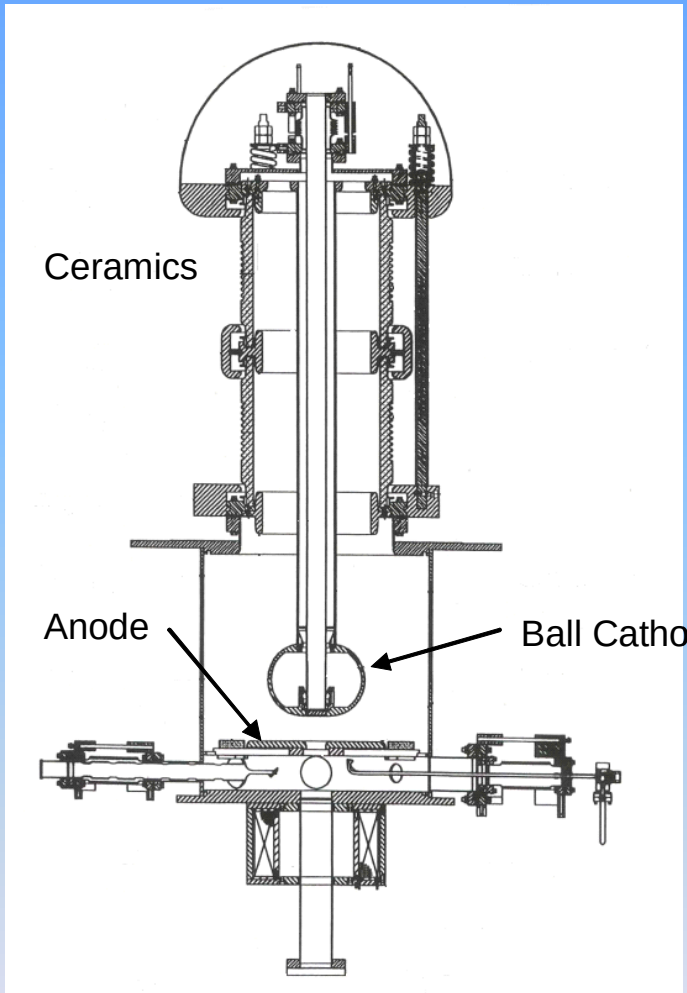

- **A DC photocathode injector for free electron lasers is used in the Jefferson Laboratory IR-kilowatt FEL. The HV gun assembly is a direct descendent of the polarized gun first built at SLAC for polarized electrons and a copy of the polarized e-gun used for the Jefferson Laboratory nuclear physics programs. However it has been modified to adapt it for the CW operation in two ways. The cathode stalk has been tailored to a specific surface resistance by using ion implantation. And the ball electrode has been modified to allow withdrawing the cathode inside for re-cessiation, to keep cesium from reaching the HV surfaces, which greatly shortens the HV processing time after a re-cesiation of the cathode. The HV limit of 350 kV for reliable operation and to 500kV (unreliable) in this design appears to be the dielectric strength of the ceramic insulator standoff.**

Jefferson Lab FEL Injector Parameters

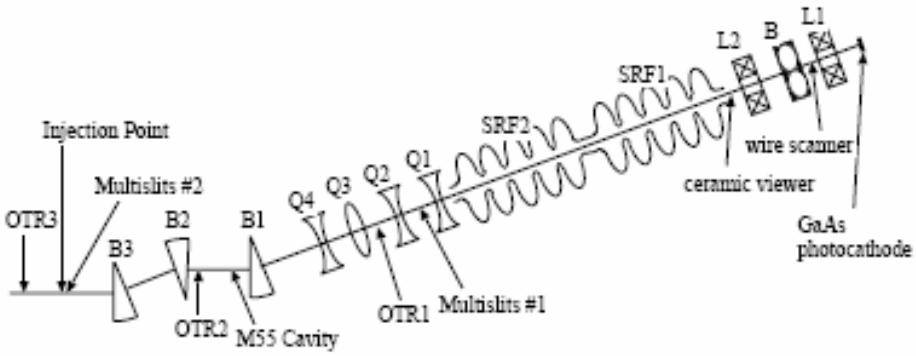

Figure 1: Block diagram of the injector. L1 and L2 are solenoidal lenses, B the buncher, SRF1 and SRF2 the RF cavities, Q1, Q2, Q3, Q4 are quadrupoles and B1, B2, B3 are dipoles.

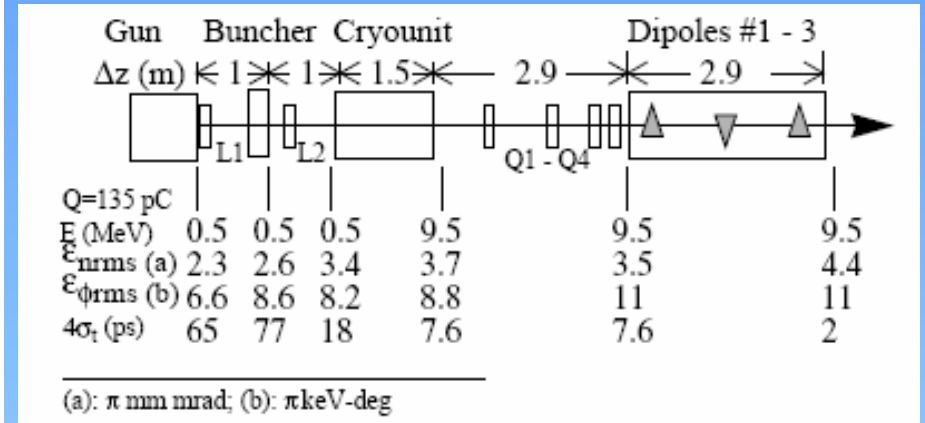

Fig. 2 Beam property evolution along the system

Gun Voltage	350kV
Duty Factor	CW
Bunch charge	135pC
Micropulse rep rate	75MHz
Average current	10mA
Cathode	GaAs(Cs)
Charge yield per cathode	$2x10^3$ C/cm^2
emittance (rms)	20 microns
Bunch length after bunching (rms)	0.4 ps

Cornell Energy Recovery Linac Injector

- The most recent injector design using the DC gun is the Cornell injector which is intended to inject into the existing high-energy physics storage ring at Cornell. The design was done using a large scale parameter search for the optimal beam emittance.

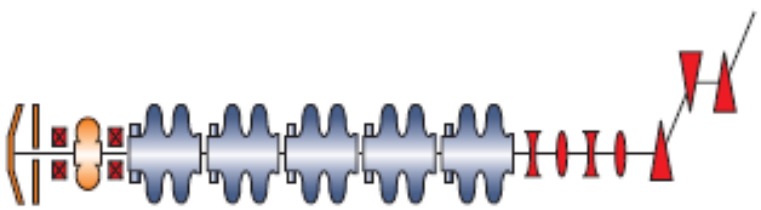

Figure 1: Injector schematic.

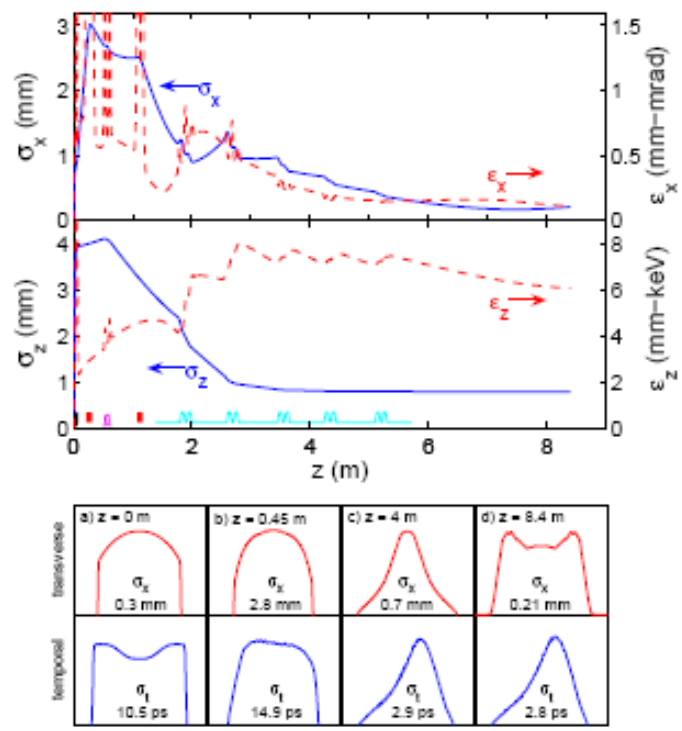

Figure 1: Beam evolution in the injector for 80 pC bunch charge: normalized transverse (top plot) and longitudinal (middle plot) rms emittances (dashed line) and sizes (solid line) versus position in the injector; transverse and temporal beam profiles (bottom plot) at various locations in the injector.

Cornell DC Gun

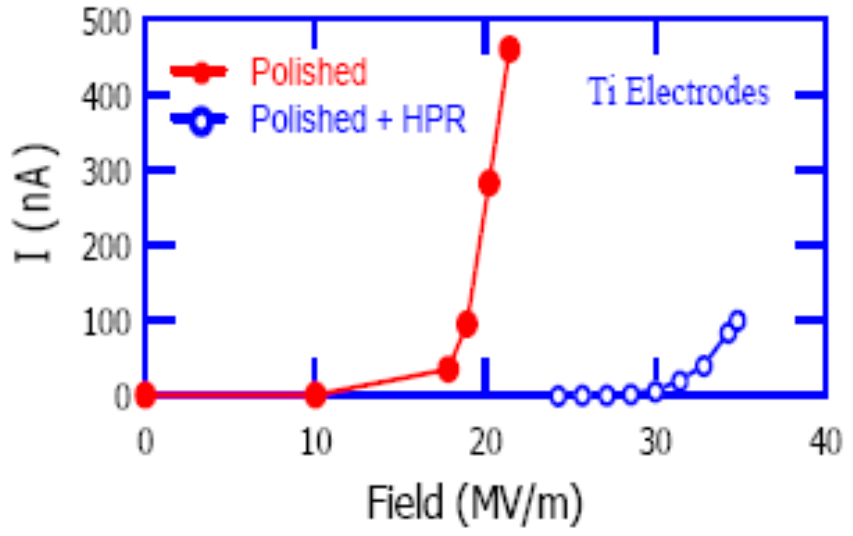

Figure 2. FE from a polished titanium electrode before and after HPR treatment

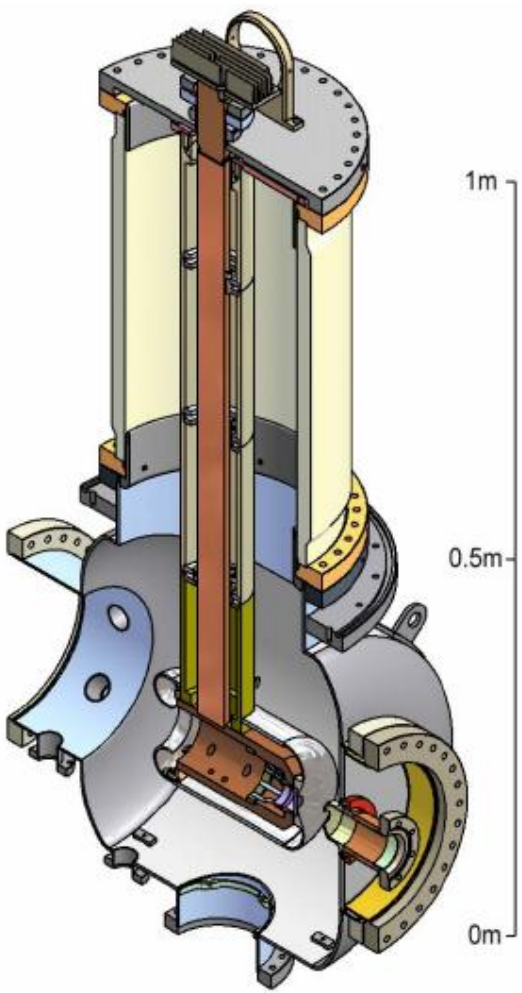

Figure 1. A cutaway view of the electron gun

- Performance of a Very High Voltage Photoemission Electron Gun for a High Brightness, High Average Current ERL Injector," B. M. Dunham et al., PAC07.

Cornell DC Gun Thermal Emittance

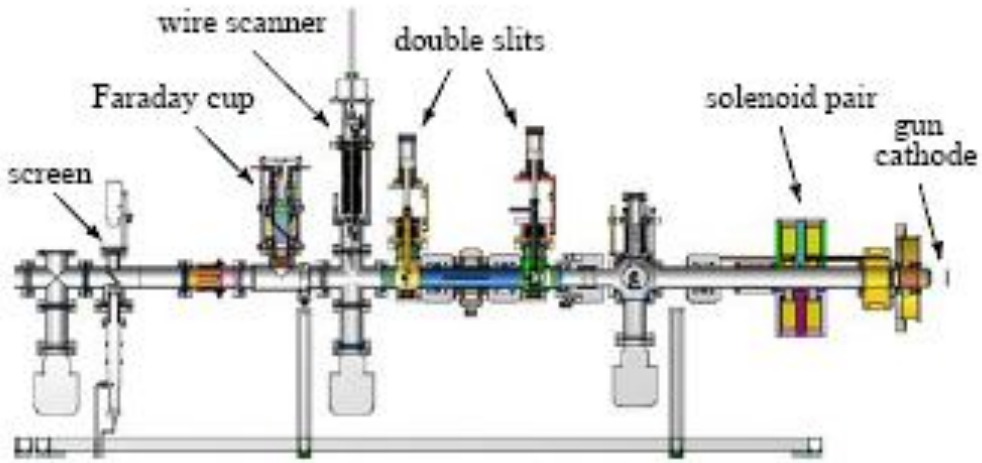

Figure 1: Beamline for thermal emittance studies. Beam direction is to the left.

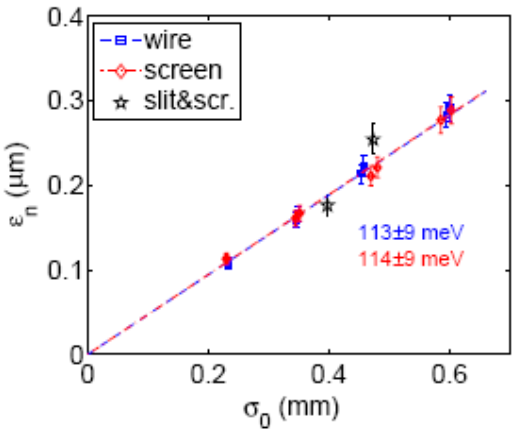

Figure 4: Comparison of various thermal emittance measurement techniques for GaAs at 532 nm.

- Thermal Emittance Measurements from Negative Electron Affinity Photocathodes," I.V. Bazarov et al., PAC07.

DC+SRF JLAB/AES Injector

- **The JLab injector for the IR-demo was built before the realization that emittance compensation was also possible for beams from DC guns. Therefore the next stage for improving the HVDC gun injector is to incorporate emittance compensation by moving the gun significantly closer to the SRF. The RF frequency has been lowered to 750 MHz and a 3rd harmonic rf cavity is incorporated into the cryomodule to improve the longitudinal emittance.**

Gun Voltage	350kV
Duty Factor	CW
Bunch charge	135pC
Micropulse rep rate	75MHz
Average current	10mA
Cathode	GaAs(Cs)
Charge yield per cathode	$2x10^3$ C/cm^2
emittance (rms)	20 microns
Bunch length after bunching (rms)	0.4 ps

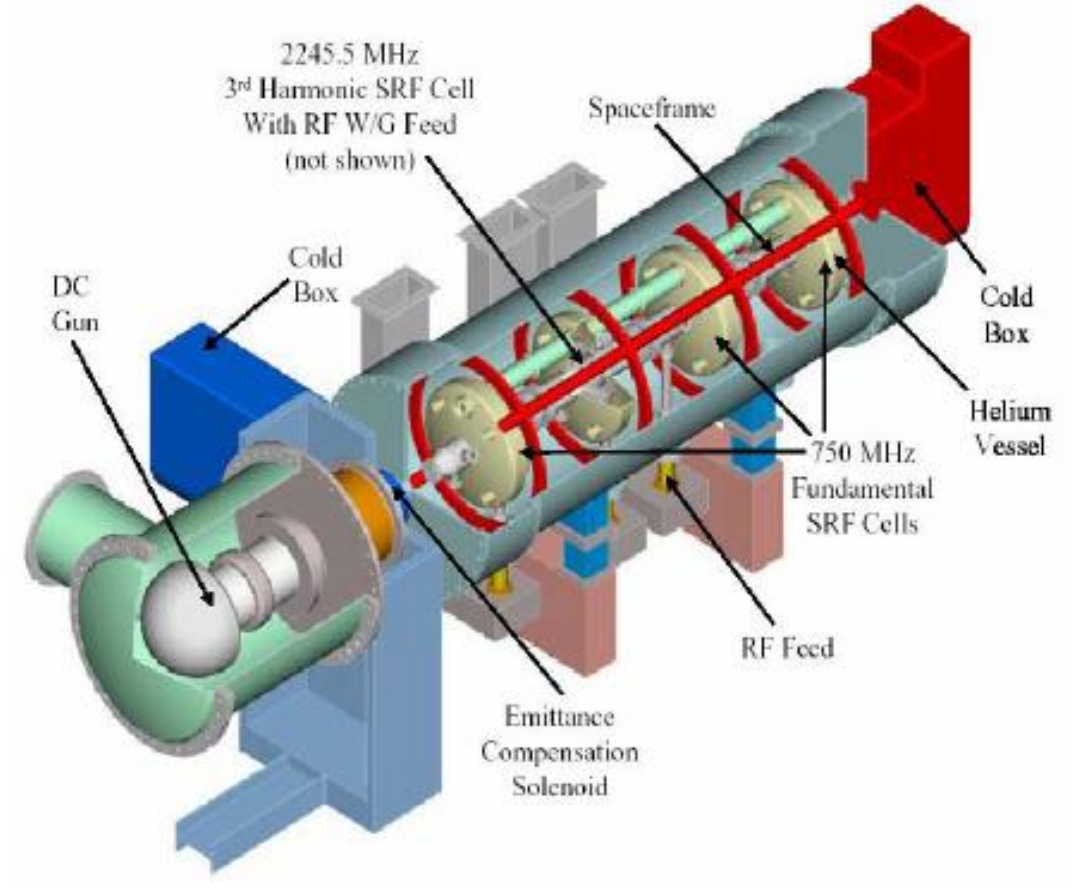

Components of the RF Photocathode Gun

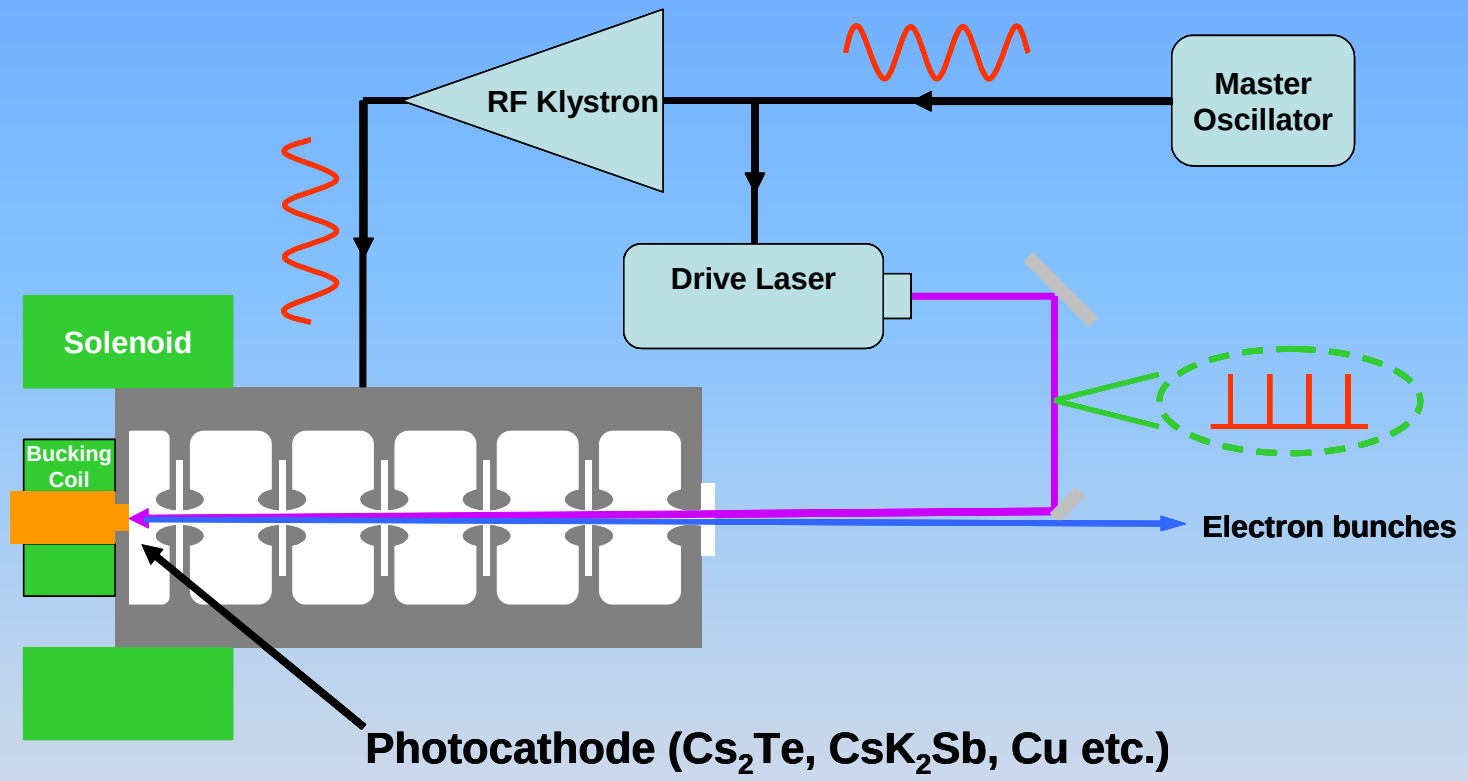

Slide compliments of P. O'Shea, UMd

The First BNL S-Band (2856 MHz) Photocathode Gun

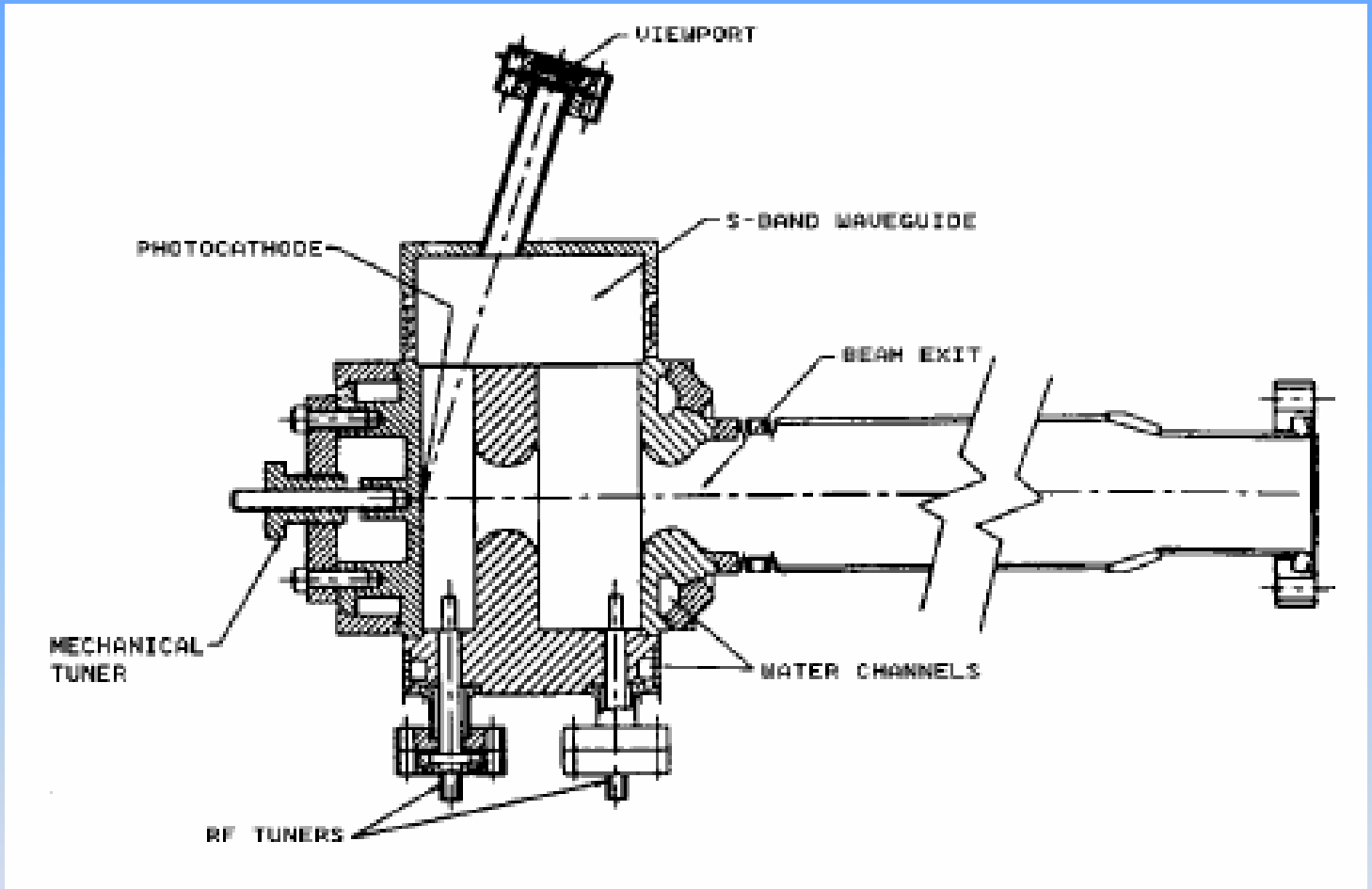

- The design for the first BNL gun used a single waveguide to side-couple rf power into both cells.

The BNL/SLAC/UCLA Gun

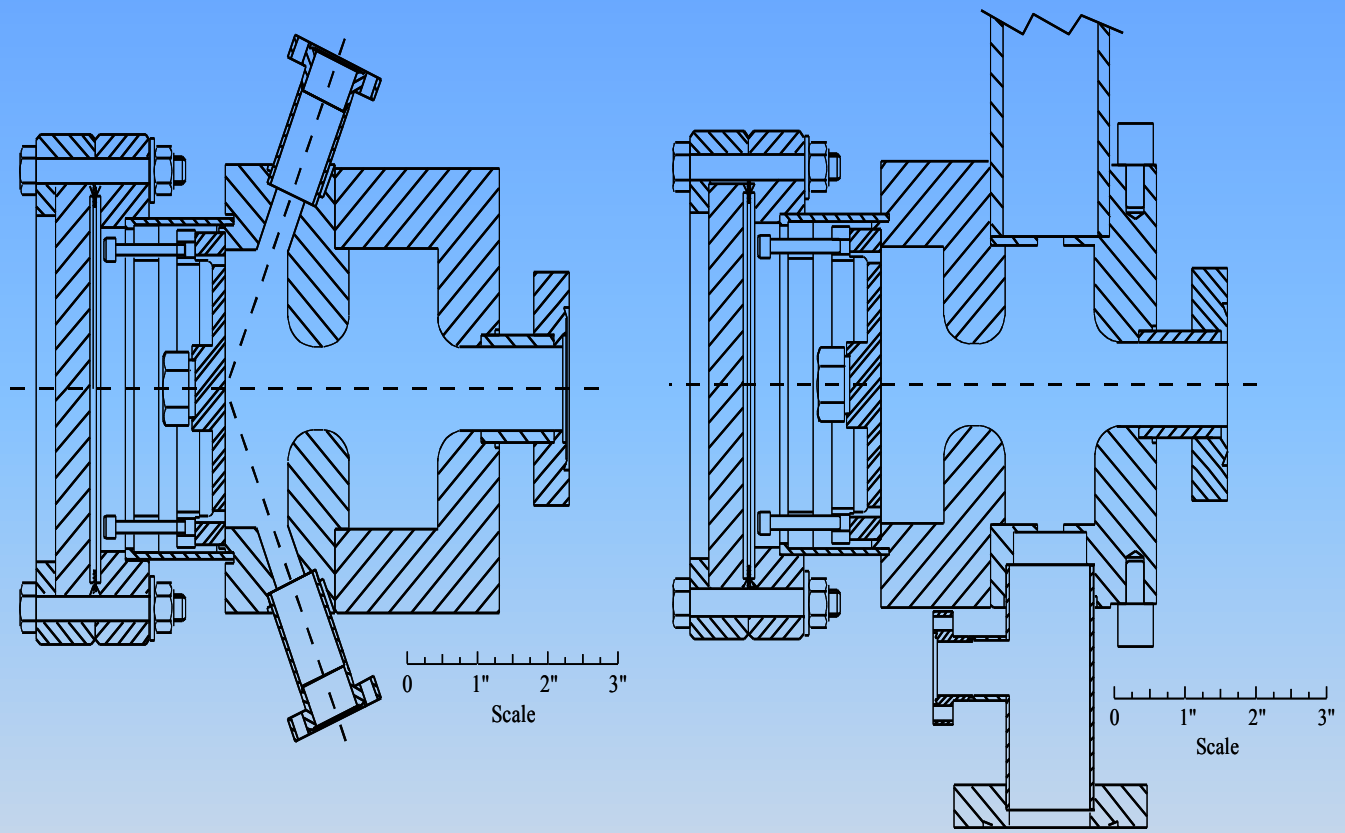

- The BNL/SLAC/UCLA gun (aka. the GTF gun) has a single rf feed on the full cell with an opposing un-powered port to balance the field asymmetry. Theta-coupling or a rf coupling hole azimuthally elongated is used to minimize the quadruple field.

The LCLS S-Band Gun Design Features

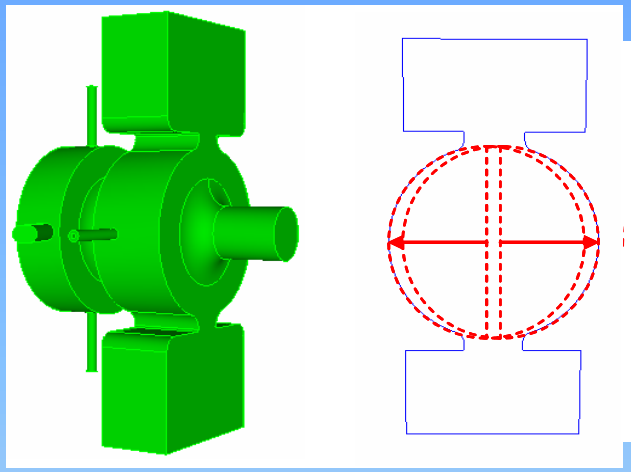

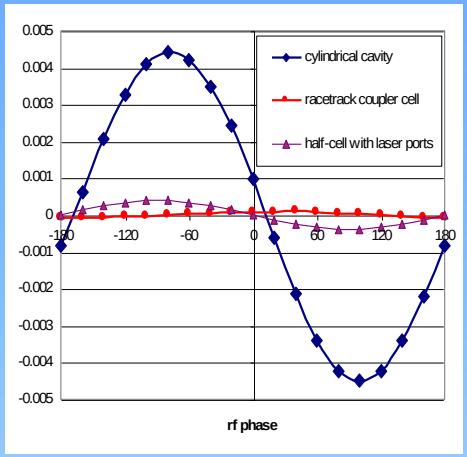

- **The interior volume of the LCLS Gun 1 (top-left drawing) illustrates the dual feed and the z-coupled rf into the full cell.**
- **The top-center drawing shows the offset of circle centers defining the "racetrack" shape of the full cell. The cathode cell (0.6cell) has a circular shape.**
- **Top-right plot: The quadrupole field integrated along the length of the full cell as a function of phase for cylindrical and racetrack shapes and the field for the half-cell due to the laser ports.**

	BNL/SLAC/UCLA; GTF	LCLS Gun 1
cathode field	100MV/m	120MV/m
rf feed	single w/compensation port	dual feed
cavity shape	circular	racetrack
0-π mode separation	3.2MHz	15MHz
repetition rate	10Hz	120Hz
peak quadrupole field	4 mrad/mm	0.1 mrad/mm
rf tuners	plunger/stub	deformation
shunt impedance		
cathode	copper	copper
rf coupling	theta (azimuth)	z (longitudinal)

The LCLS Gun and Solenoid Assembly

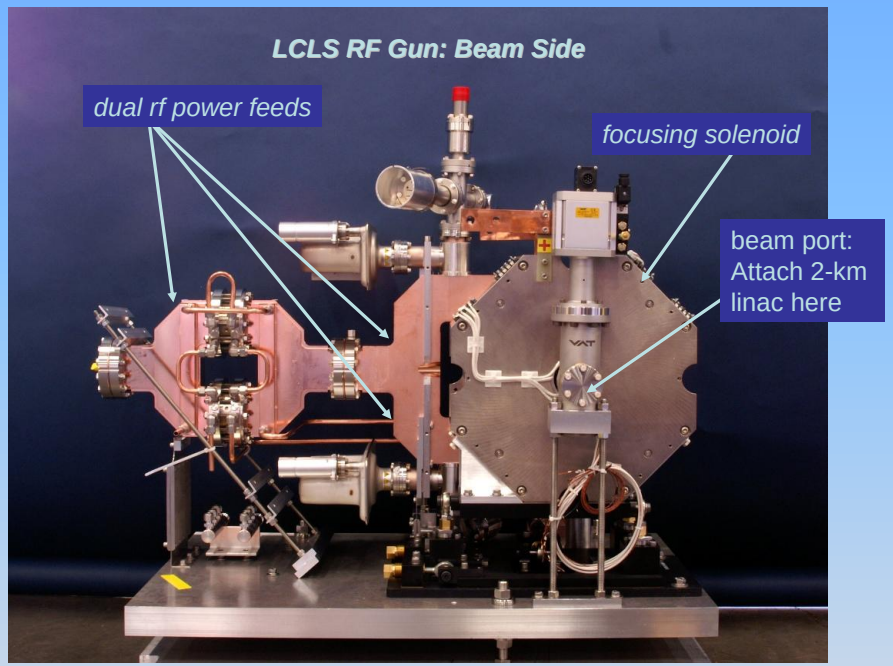

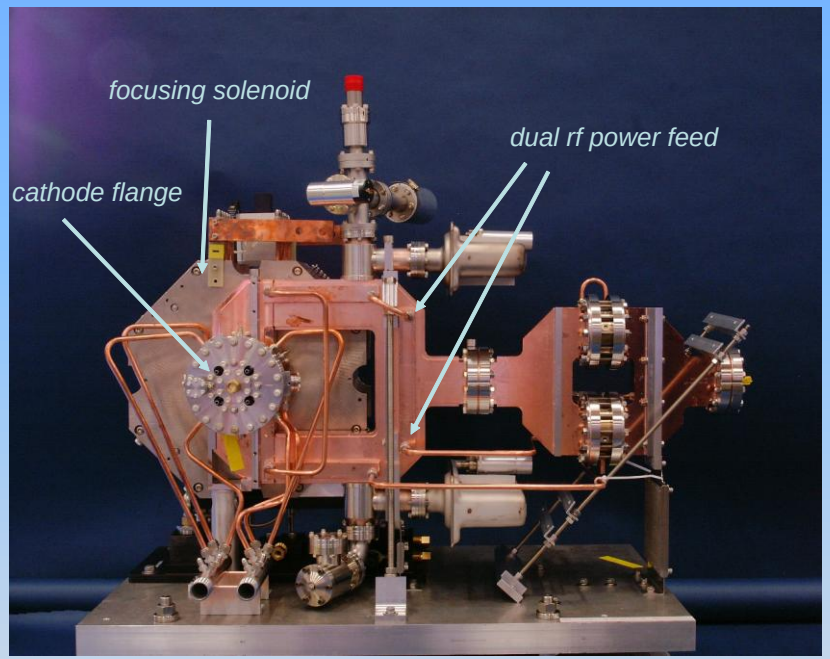

LCLS Gun Performance at 1nC

Projected Emittance (rms) at 1nC (95% of the beam):
ε_x = 1.14 microns
ε_y = 1.06 microns

Slice Emittance, Current & Matching:
Slices 3 to 7 (tail) are all below 1 micron.
Head slices (8-10) are > 1 micron.
Peak Current is 100 amps.

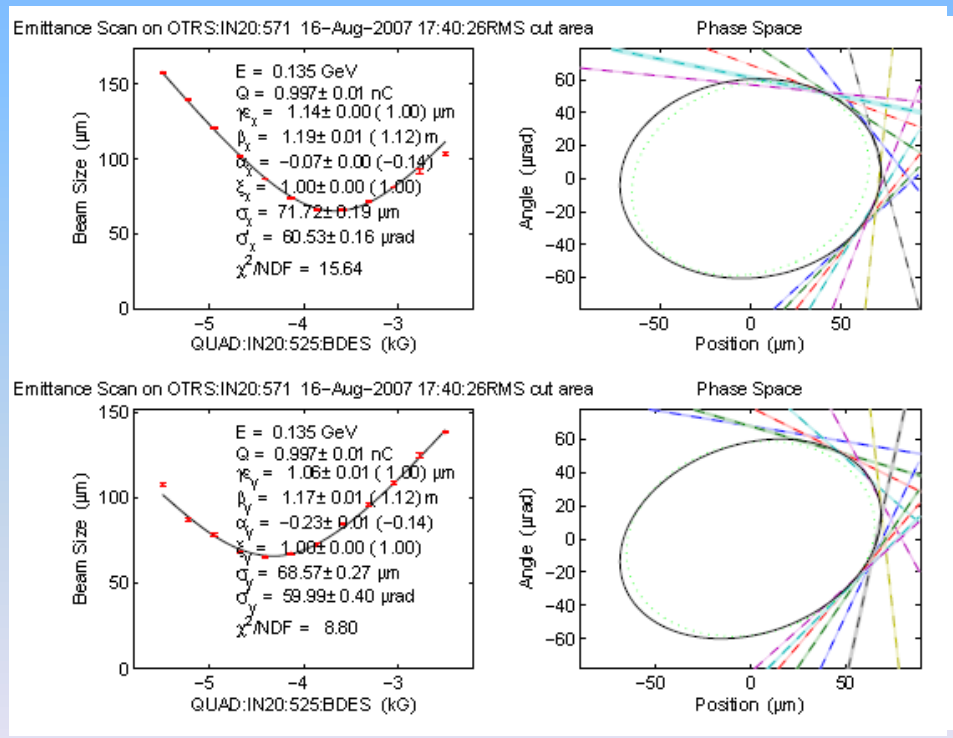

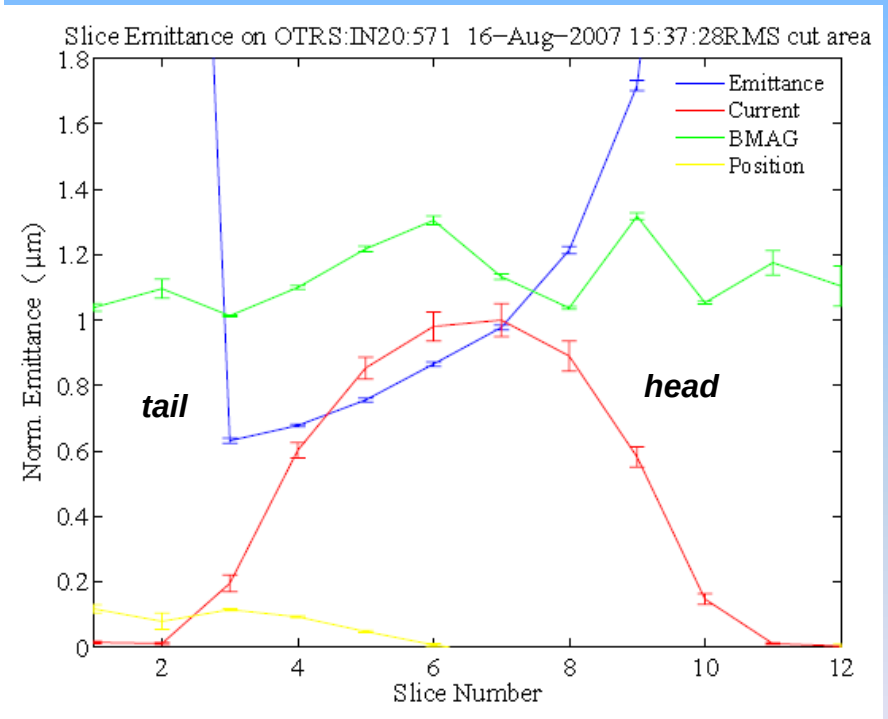

On-line analysis tools by H. Loos

Coaxial RF Photocathode Guns
The TTF/FLASH 1300 MHz Gun

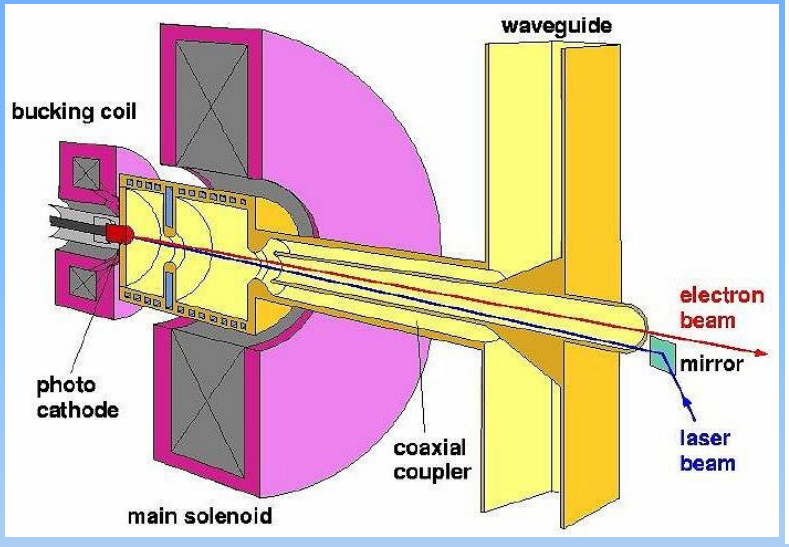

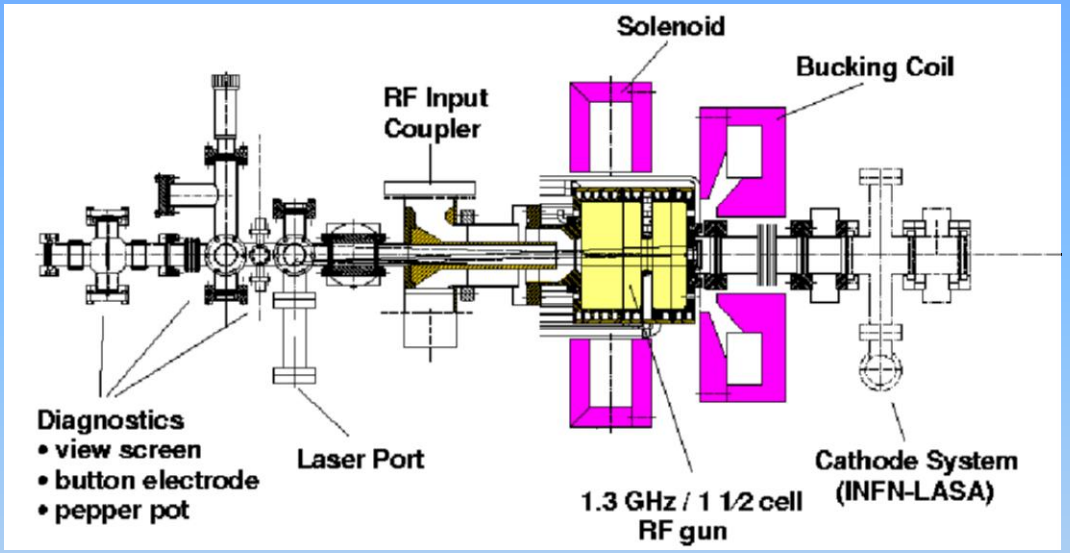

- This gun has achieved 1.2 micron emittance for 1 nC bunches 17 ps long or 58 amperes of peak current which represents the state-of-the-art in electron beam quality . Unlike the s-band gun, this gun will operate at higher average power producing 10 ms long bunch trains at 10 Hz. Its beam injects into a single-pass SRF accelerator to drive a SASE FEL .

Performance of the Coaxial RF Gun

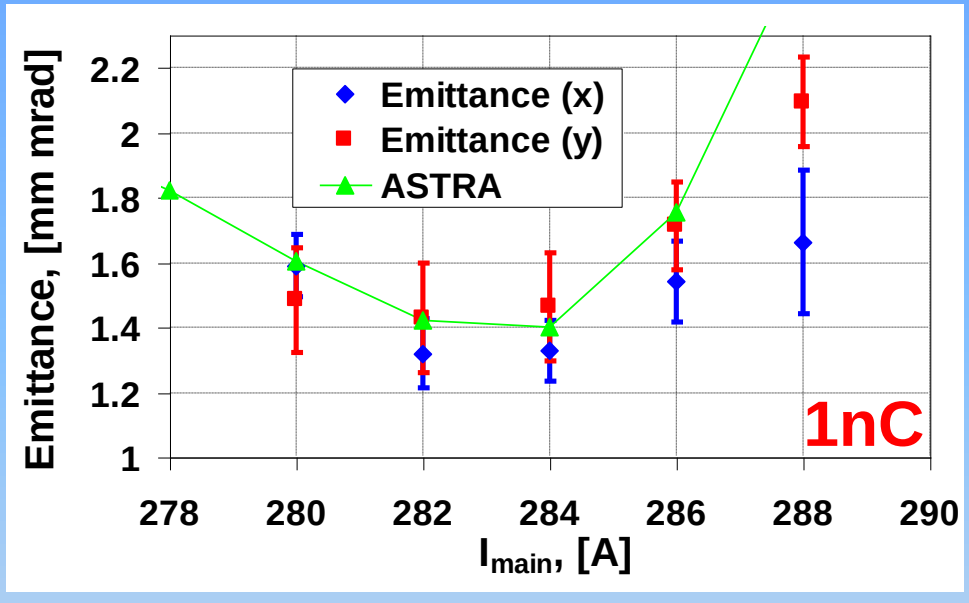

F. Stephan, Proc. FEL2007

- The optimized emittance plotted as a function of the gun solenoid current. The data shows an x-y plane asymmetry attributed to the wake of the laser injection mirror.

High-Average Power/Current Guns

- ERL based free electron lasers will require a continuous train of electron bunches to take full advantage of the ERL's capabilities. Of course, the first ERL-based fel uses a DC gun which more easily lends itself to CW operation than the rf gun. However rf guns have demonstrated higher single-bunch beam brightness than the DC guns, making it desirable to have a CW RF gun for this application. It is a major technical challenge to increase the rf gun duty factor from 0.01 percent to 100 percent, and currently there are two approaches being developed. The first maybe considered brute force as it 'simply' increases the rf power capability of the Normal Conducting RF (NCRF) gun by lowering the frequency and improving the cooling design. The second is to make the gun a superconducting rf (SRF) gun. Given that ERL will already be operating with a SRF accelerator system, the SRF gun naturally fits into the overall fel design, and once perfected is likely to become the choice of future ERL-based fels.

High Average Power Normal Conducting RF (NCRF) Guns

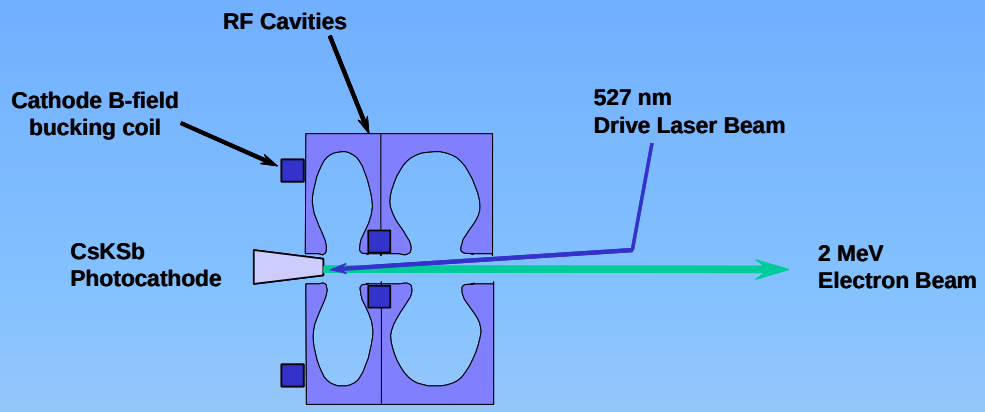

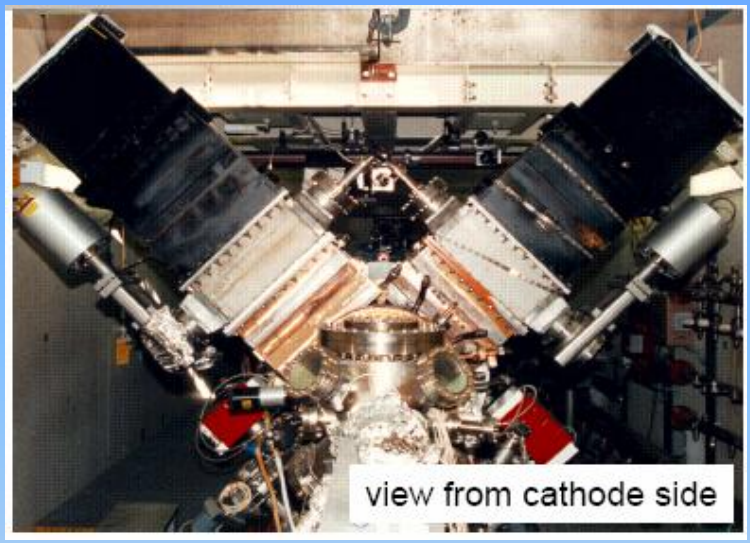

- The first NCRF gun to operate at high duty factor was the Boeing/LANL gun which operated at 25 percent duty factor in 1992. This gun was built in an industry-laboratory partnership between Boeing and Los Alamos as part of the US Strategic Defense Initiative for the US Department of Defense. Its purpose was to demonstrate the best gun technology for a high power ground based free electron laser system for defense.

The Boeing Gun Operating Parameters (1992)

Photocathode Performance:	
Photosensitive Material:	K_2CsSb Multialkali
Quantum Efficiency:	5% to 12%
Peak Current:	45 to 132 amperes
Cathode Lifetime:	1 to 10 hours
Angle of Incidence:	near normal incidence
Gun Parameters:	
Cathode Gradient:	26 MV/meter
Cavity Type:	Water-cooled copper
Number of cells:	4
RF Frequency:	433 $x10^6$ Hertz
Final Energy:	5 MeV(4-cells)
RF Power:	600 $x10^3$ Watts
Duty Factor:	25%, 30 Hertz and 8.3 ms
Laser Parameters:	
Micropulse Length:	53 ps, FWHM
Micropulse Frequency:	27 $x10^6$ Hertz
Macropulse Length:	10 ms
Macropulse frequency:	30 Hertz
Wavelength:	527 nm
Cathode Spot Size:	3-5 mm FWHM
Temporal and Transverse Distribution:	gaussian, gaussian
Micropulse Energy:	0.47 microjoule
Energy Stability:	1% to 5%
Pulse-to-pulse separation:	37 ns
Micropulse Frequency:	27 $x10^6$ Hertz
Gun Performance:	
Emittance (microns, RMS):	5 to 10 for 1 to 7 nCoulomb
Charge:	1 to 7 nCoulomb
Energy:	5 MeV
Energy Spread:	100 to 150 keV

The LANL/AES 700 MHz NCRF Gun

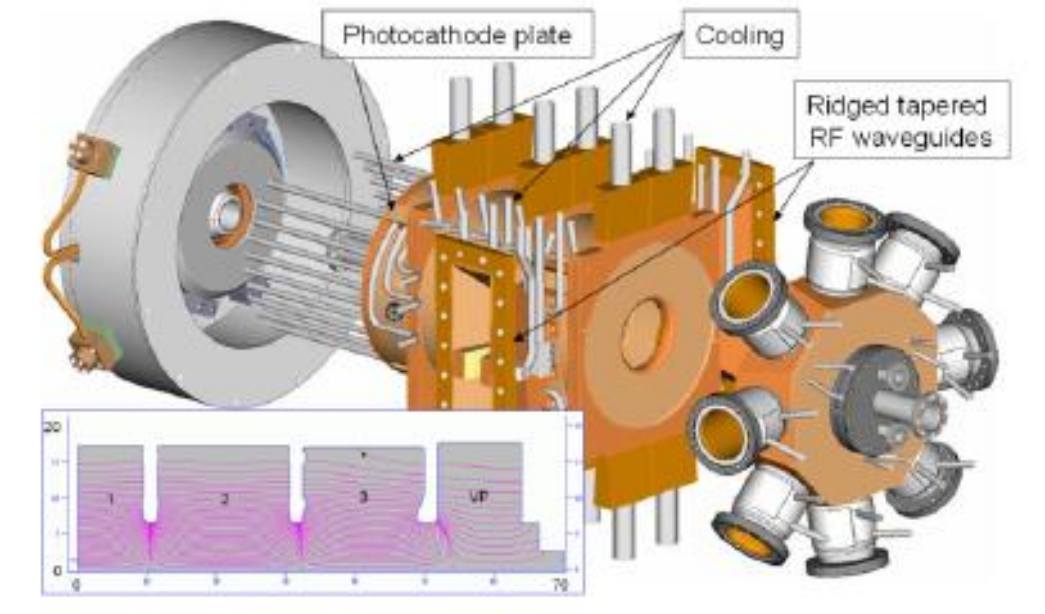

- **A recent version of the CW room temperature rf gun has been built by Advanced Energy Systems for Los Alamos National Laboratory. This 2.5 cell gun shown in Figure 46 operates at 700 MHz to produce a 2.5 MeV beam of a pulse train with 3 nC bunches, and has been designed to produce a 100 mA average current beam, and there are plans to upgrade to one ampere. The normalized transverse emittance is computed to be less than 7 microns by temporally overlapping two Gaussian laser pulses in order to approximate a square pulse. Thermal management is the principle technical challenge for the room temperature gun. The power density dissipated in the cavity walls needs to be less than 200 W/cm2 in order to avoid excessive thermal stress in the structure and this is especially problematic in the areas around the RF coupler irises. This limits the gun's accelerating field to 7MV/m.**

SRF Guns

- Since many of the proposed ERL-based FEL's will operate with SRF accelerators it is only natural to desire the gun to be SRF as well. The remote possibility of building such a gun became more immediate when the Rossendorf group in Dresden, Germany announced they had built and operated the world's first SRF gun . Although the bunch charge was less than 4 pC and the operating time was short, the achievement captured the RF gun community's imagination. As a result Rossendorf is now working on 3.5 cell version of their gun for their facility and is working with BESSY for a SRF gun as a source for a SASE fel proposed for that facility. A SRF gun is now being designed and built for an electron cooler system for RHIC at BNL.
- The major technical issues for the SRF gun are the thermal isolation between the cathode and the superconducting structure, and providing the focusing needed for emittance compensation. The first is important because the cathode is normal conducting, operating at 77degreesC. The isolation is performed by using an rf choke. And the superconducting structure cannot tolerate any magnetic field. The Rossendorf group has proposed providing this focusing with a variant of the two-frequency gun using a TE mode to provide magnetic rf focusing since magnetic focusing cannot be used in a SRF gun.

Rossendorf SRF Gun

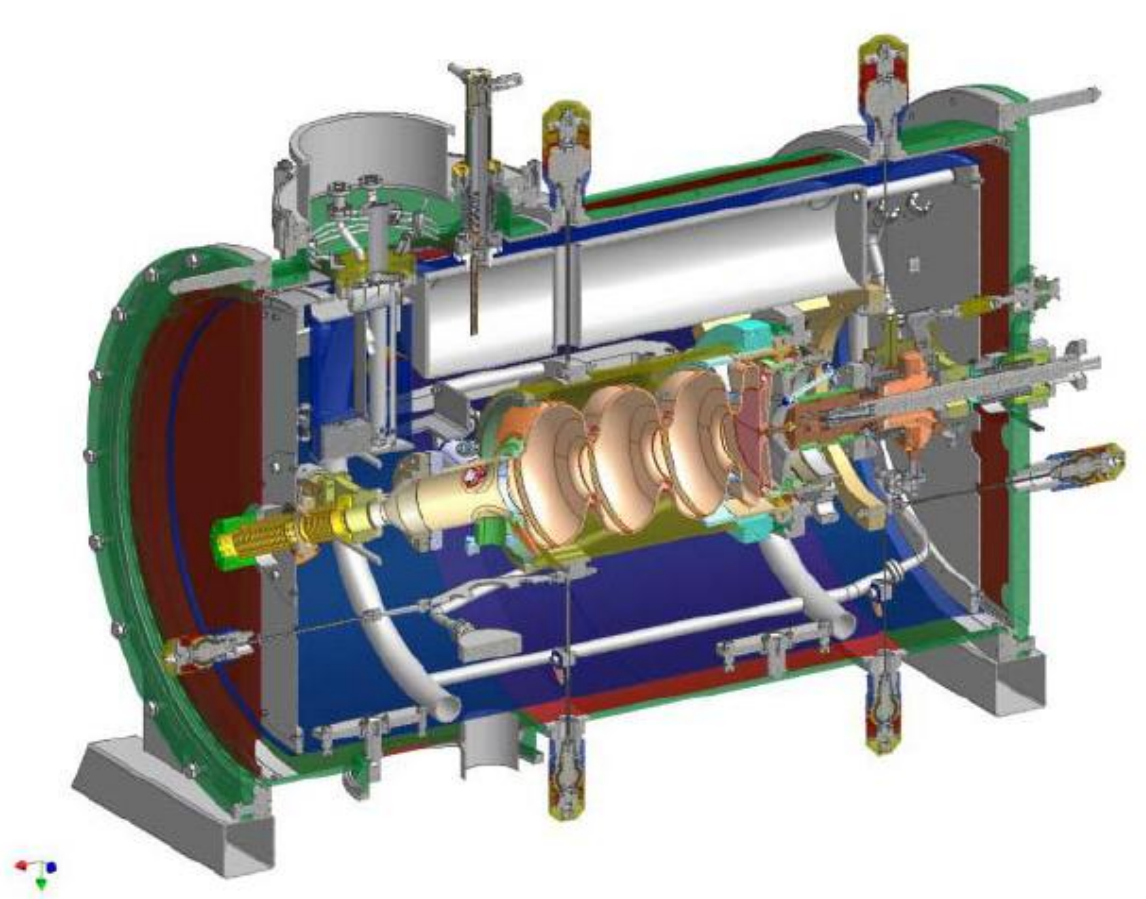

Figure 1: 3-D view of the SRF gun cryomodule.

SRF Guns Require RF Focusing

Focusing in Rossendorf Gun

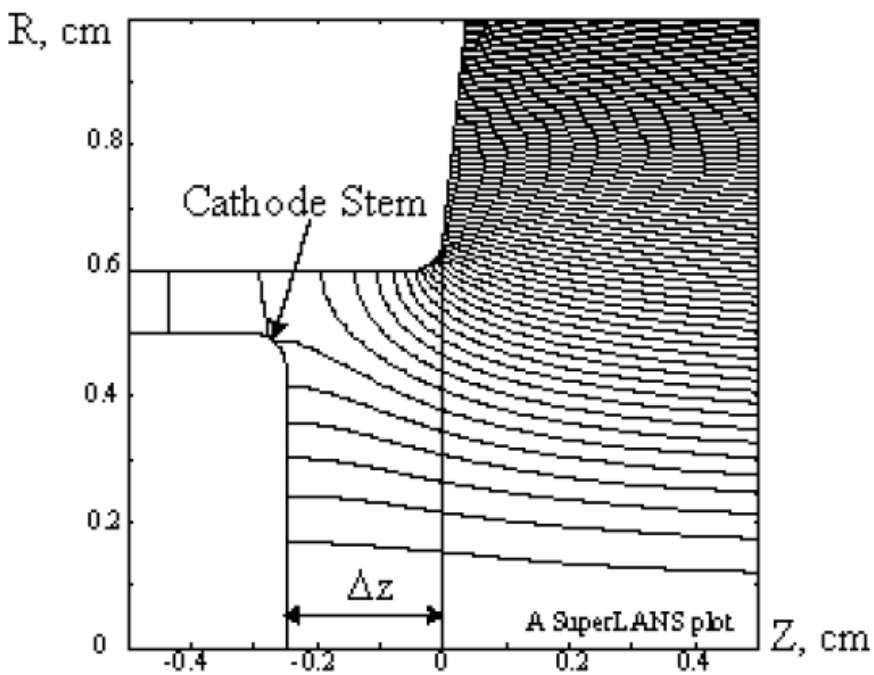

Figure 2: Close view of the field pattern near the cathode.

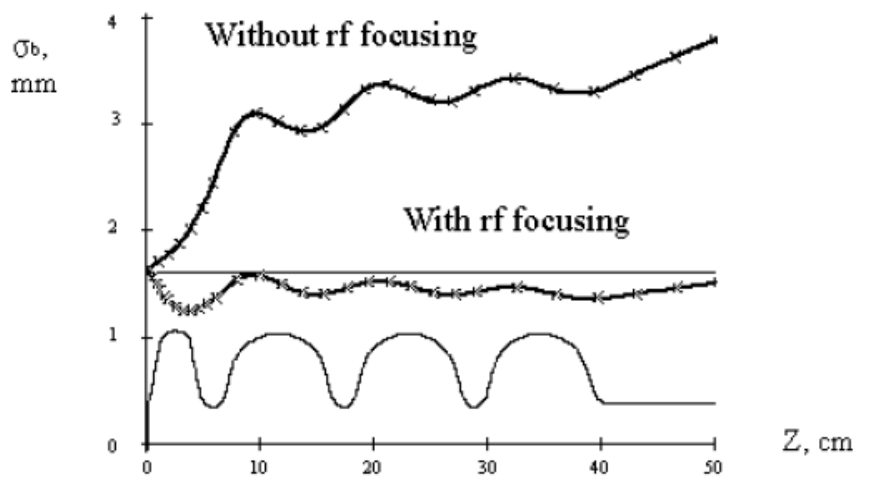

Fig.3: Rms bunch radius σ_b vs distance from cathode

"RF focusing…", V. Volkov and D. Janssen, Proc. EPAC 2000

Parameters for Rosendorf SRF Gun

Table 1: Results of PARMELA calculations for the 3+1/2 cell 1.3 GHz superconducting rf gun

Parameter	**Units**	Full bunch / *10% head&tail truncated*					$\Delta z = 0$
Bunch charge	pC	85	200	1000	200	1000	1000
Laser pulse shape	Gaussians number×σ(ps)	1 × 2.3	1 × 3.0	1 × 3.0	3 × 3.0	3 × 3.0	3 × 3.0
Laser pulse length (FWHM)	ps	5.3	7	7	18	18	18
Laser spot diameter	mm	3	3	4	3	4.6	4.6
Accelerating gradient	MV/m	20	25	25	25	25	25
Injection phase	deg	12.5	33	30	33	30	51.5
Distance from the cathode	cm	150	230	190	110	150	50
Energy	MeV	7.912	10.00	9.986	10.01	10.00	10.01
Energy spread (rms)	keV	3.786 *2.964*	5.78 *4.31*	9.82 *8.43*	9.85 *7.49*	17.07 *12.53*	12.9 *9.8*
Transversal normalized emittance (rms)	π mm·mrad	0.86 *0.427*	**1.07** *0.464*	2.2 *2.07*	**1.065** *0.42*	2.28 ***0.976***	5.85 *4.18*
Longitudinal emittance (rms)	mm·keV	2.046 *0.719*	3.598 *2.12*	15.96 *9.84*	15.5 *9.6*	35.8 *22.32*	23.36 *15.45*
Bunch radius (rms)	mm	1.76 *1.845*	2.65 *2.786*	6.93 *7.22*	0.63 *0.61*	2.9 *2.9*	3.71 *3.7*
Bunch length (rms)	mm	0.576 *0.486*	0.952 *.821*	1.7 *1.48*	1.61 *1.4*	2.1 *1.84*	1.83 *1.58*

BNL/AES SRF Gun

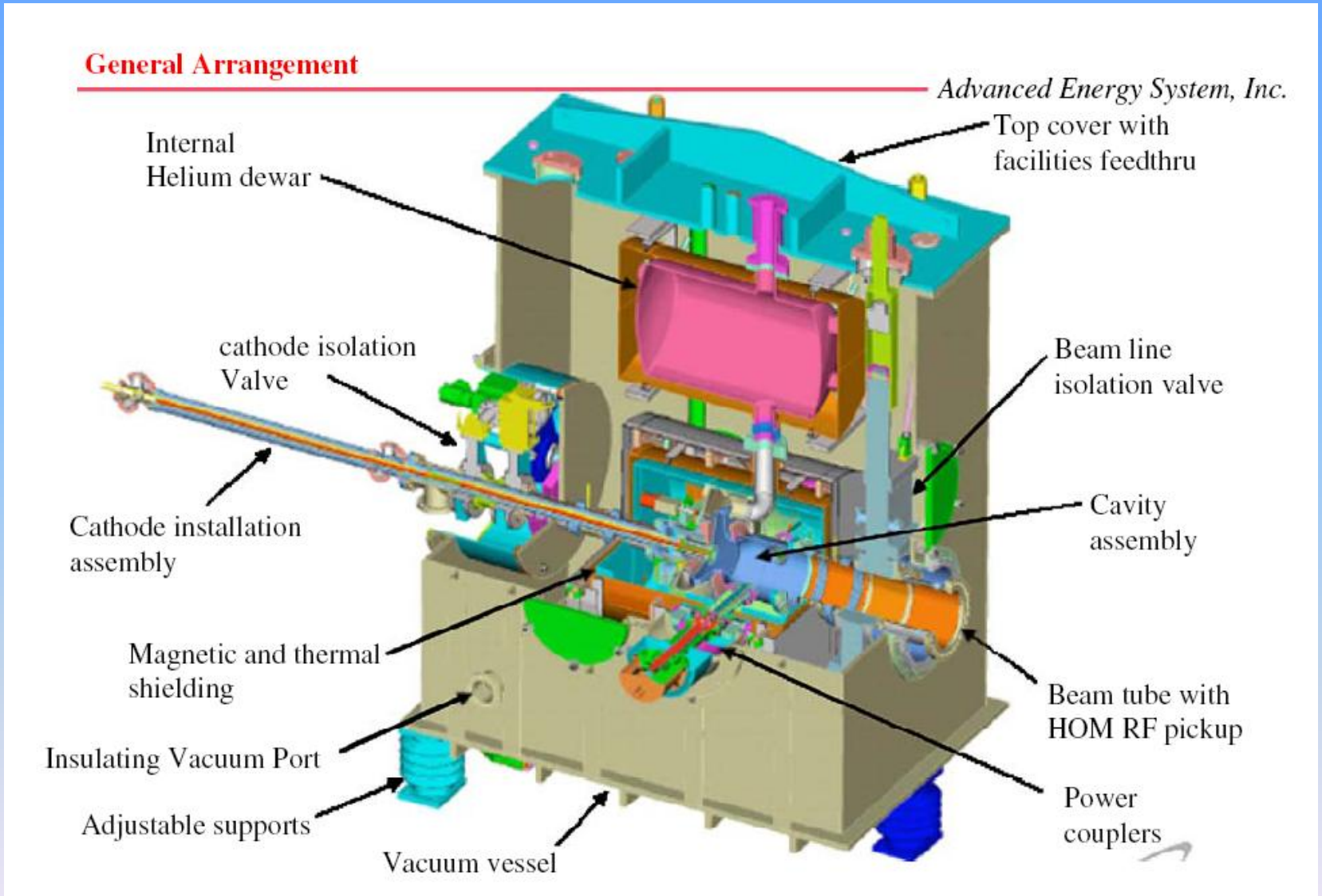

Details of BNL SRF Gun

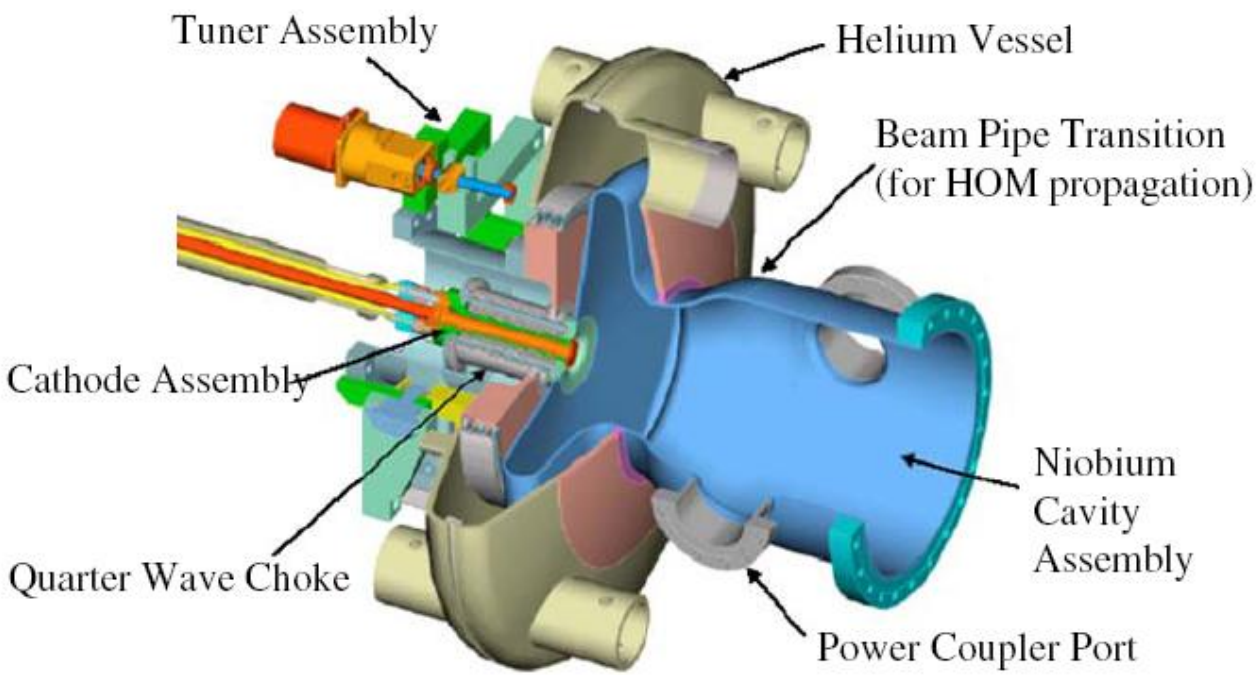

Fig. 3. The quarter wave RF choke joint that is being designed for the SRF photoinjector is shown along with a more detailed view of the photoinjector itself.