January 14-18 2013

Vacuum Science and Technology for Accelerator Vacuum Systems

Yulin Li and Xianghong Liu
Cornell University, Ithaca, NY

Duke UNIVERSITY

Cornell Laboratory for Accelerator-based Sciences and Education (CLASSE)

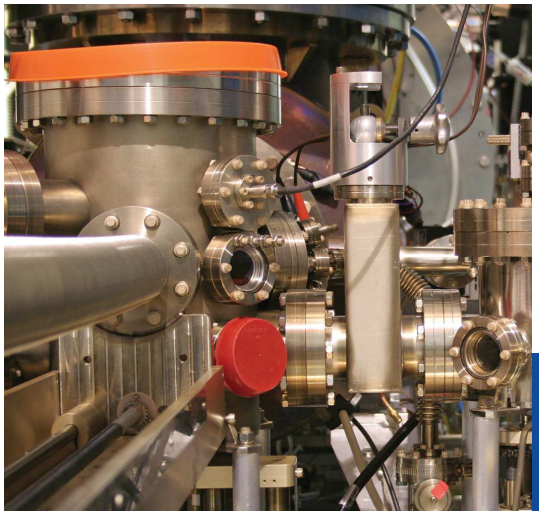

Table of Contents

- Vacuum Fundamentals
- Vacuum Instrumentation
- **Vacuum Pumps**
- Vacuum Components/Hardware
- Vacuum Systems Engineering
- Accelerator Vacuum Considerations, etc.

SESSION 3.1: VACUUM PUMPS

- Category of Vacuum Pumps
- Displacement Pumps
- Capture Pumps
- Accelerator Pumping Considerations

Two Major Categories of Vacuum Pumps

Based on how the gases are removed from gas phase

Displacement Pumps

- Pumping by displacing gas to outside of the vacuum envelope, via ***volume exchange***, or ***momentum transfer*** to compress and to convey gaseous molecules to the exhaust
- Primary pumps can start from atm. Pressure.
- No capacity limit
- Moving parts may fail in continuous operations. Potential contamination.

Capture Pumps

- Pumping by storing, or capturing gas molecules through ***chemi-*** or/and ***physi-*** sorption onto the pumping elements
- No moving parts, clean
- Can't (effectively) operate at high pressure
- Limited pumping capacity

Fundamental Pump Parameters

Pumping Speed

- Pumping speed of a pump is the volumetric rate at which gas is transported across the pump inlet port.
- It has a dimension of volume per unit time. Commonly used are: m^3/s, CFM, m^3/h, L/s
- Pumping speed is usually pressure dependent, and gas dependent.

Working Pressure Range and Ultimate Pressure

- Every pump has a finite range of pressure in which it performs effectively in removing gases.
- Ultimate pressure is the lowest pressure a pump can achieve with inlet blanked off.

Pumping Capacity

- Most capture pumps have finite pumping capacity, which measures a mount of gases it can capture either (1) before a regeneration is needed, or (2) a pump has to be replaced

Pumping Speed Measurement

- In most applications, the pumping speed information supplied by the pump manufacturers is sufficient.
- However, there are needs for measuring pumping speed of a pump for reasons such as:
  → To verify pumping performance, after a pump rebuild or recondition.
  → To measure pumping speed for a specific gas
  → To measure pumping speed at specific conditions (different operation voltages, temperature, magnetic environment, etc.)
- Pumping speed is defined as: $S = Q/P_{inlet}$. So both the throughput (Q) and pump inlet pressure (P_{inlet}) need to independently measured in pumping speed measurements.
- There are two AVS recommended methods of pumping speed measurement: the flow-meter method and the conductance (orifice) method.

Pumping Speed Measurement – Flow-Meter Dome

- Gas is introduced into the test dome with a known rate, Q
- Q is controlled either with a flow-meter (at high loads), or using a calibrated leak.
- $S = Q / (P-P_0)$, P_0 is the base pressure.
- This is mostly used for primary pumps

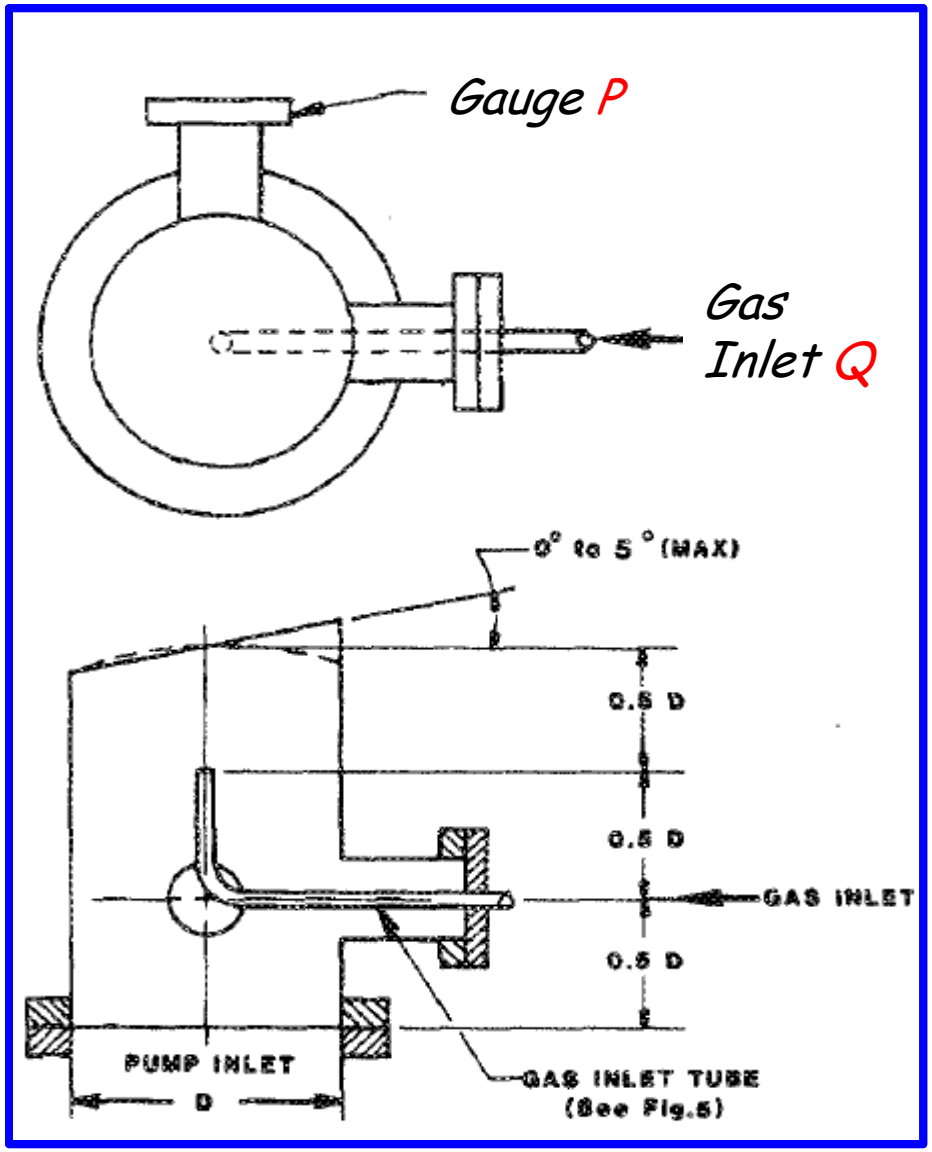

From: M. H. Hablanian, J. Vac. Sci. Technol. **A5**, 1987, p.2552

Pumping Speed Measurement – Orifice Dome

- An orifice with defined geometry defines the flow rate.
- $Q = C_{orifice} \times (\Delta P_1 - \Delta P_2)$
- $S = Q / \Delta P_2$
- This is mostly used for HV and UHV pumps. No need for calibrated flow rate control.

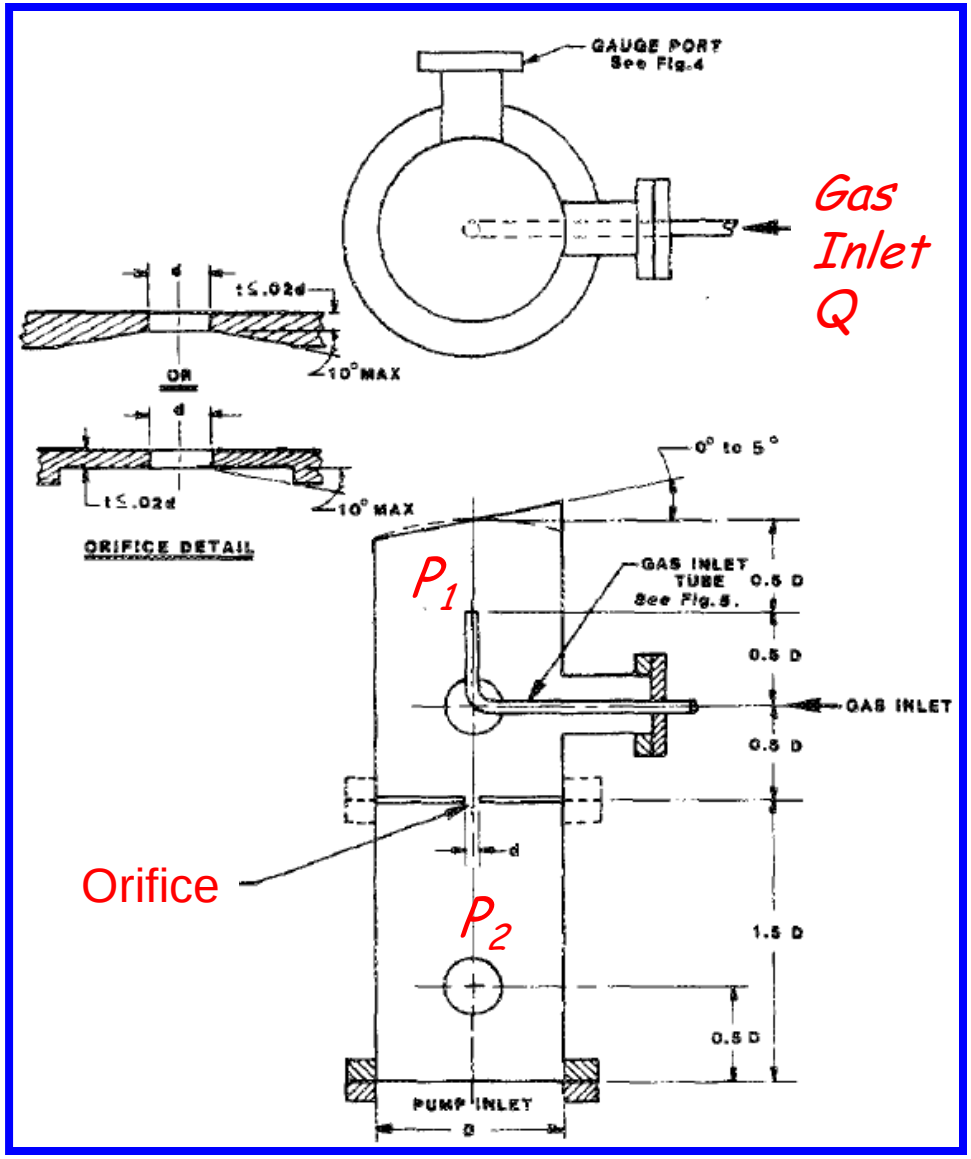

From: M. H. Hablanian, J. Vac. Sci. Technol. **A5**, 1987, p.2552

Flow Control – Flow meters

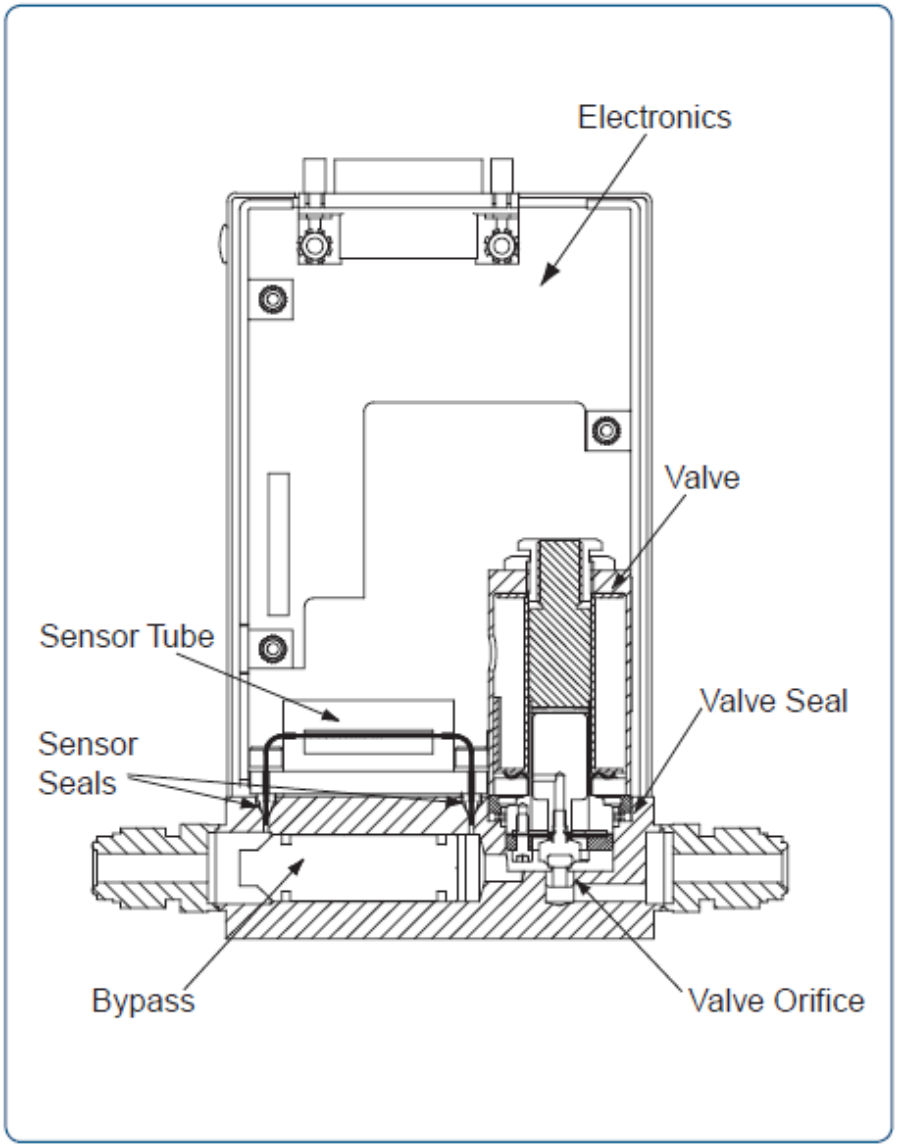

- *Flow rates: 5 sccm ~ 10 slm (N_2 equivalent)*
- *Precision: 0.1% ~ 1% F.S.*

Flow Control – Calibrated Leaks

- *Crimped capillary leaks are widely used*
- *Flow (leak) rates: 10^{-9} to 10^{-4} torr·l/sec for most stable gases (single and mixtures)*
- *Very reproducible gas sources (with periodic calibrations)*
- *NIST-traceable calibrations*

Flow Control – Variable Leak Valves

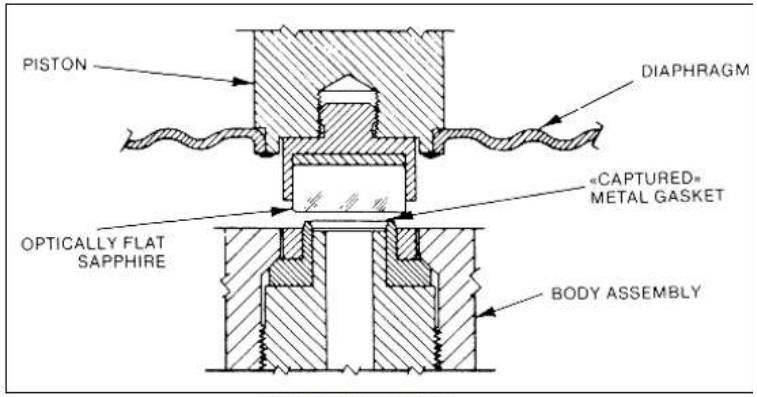

Sealing detail

Variable leak valve specifications

Minimum leak rate	1 x 10^{-9} Torr-litres/sec. in normal operation; 1 x 10^{-10} Torr-litres/sec. with condensable vapours eliminated from leak gas
Rate of change of leak	The valve provides an increasing rate of change as the size of the leak increases giving precise control in proportion to the size of the leak
Vacuum range	From atmospheric pressure to below 10^{-11} Torr
Temperature range	Up to 450 C in either open or closed position
Inlet gas pressure	*500* psi maximum
Gasket life	For unbaked systems, approximately 300 closures; For baked systems, 20 to 30 closures Gasket assemblies are replaceable
Material	300 series stainless steel; sapphire; OFHC copper and copper alloy
Weight	1.8 Kg (4 lbs)

Pumping Speed Measurement – No Dome

- Pumping speed may be estimated without a test dome, and without calibrated gas load (but need a load!)
- Assume that the speed of a pump does not change over a pressure range (1~2 orders of magnitude):

$$S = \frac{Q_{load} - Q_{base}}{P_2 - P_1} = V \frac{dP_{load}/dt - dP_{base}/dt}{P_2 - P_1}$$

- First pump down the system to a base pressure P_1, then turning the pump off to measure rate-of-rise dP_{base}/dt .
- Then introduce a gas load to raise system pressure to P_2, with the pump on. Re-measure rate-of-rise dP_{load}/dt by turning the pump off.

Displacement Pumps

Based on working pressure ranges

Primary Pumps

HV-UHV Pumps

Oil-sealed or "Wet" Pumps

- *Rotary vane pumps*
- *Piston pumps*
- *Roots pumps*

Dry Pumps

- *Diaphragm pumps*
- *Scroll pumps*
- *Screw pumps*

Diffusion Pumps

Turbo-molecular pumps

Primary Pumps

Type	Advantages	Disadvantages
Rotary Vane	Low Ultimate Pressure Low Cost Reliable	Source of Backstreaming Oil & Hazardous Waste
Rotary Piston	High Pumping Speed Low Cost	Noisy Source of Vibration
Scroll	Clean Low "clean" Ultimate Pressure	Permeable to light gases Clean applications only
Diaphragm	Quiet Easy to work on	Low Pumping Speed High Ultimate Pressure Requires frequent servicing
Roots Blower	No (Low) Backstreaming Low Ultimate Pressure	Expensive Requires frequent servicing Requires purge gas
Screw Pump	Handle high displacement rate Work with condensable gases/vapors Quiet operation	Expensive Heavy

Rotary Vane Mechanical Pumps

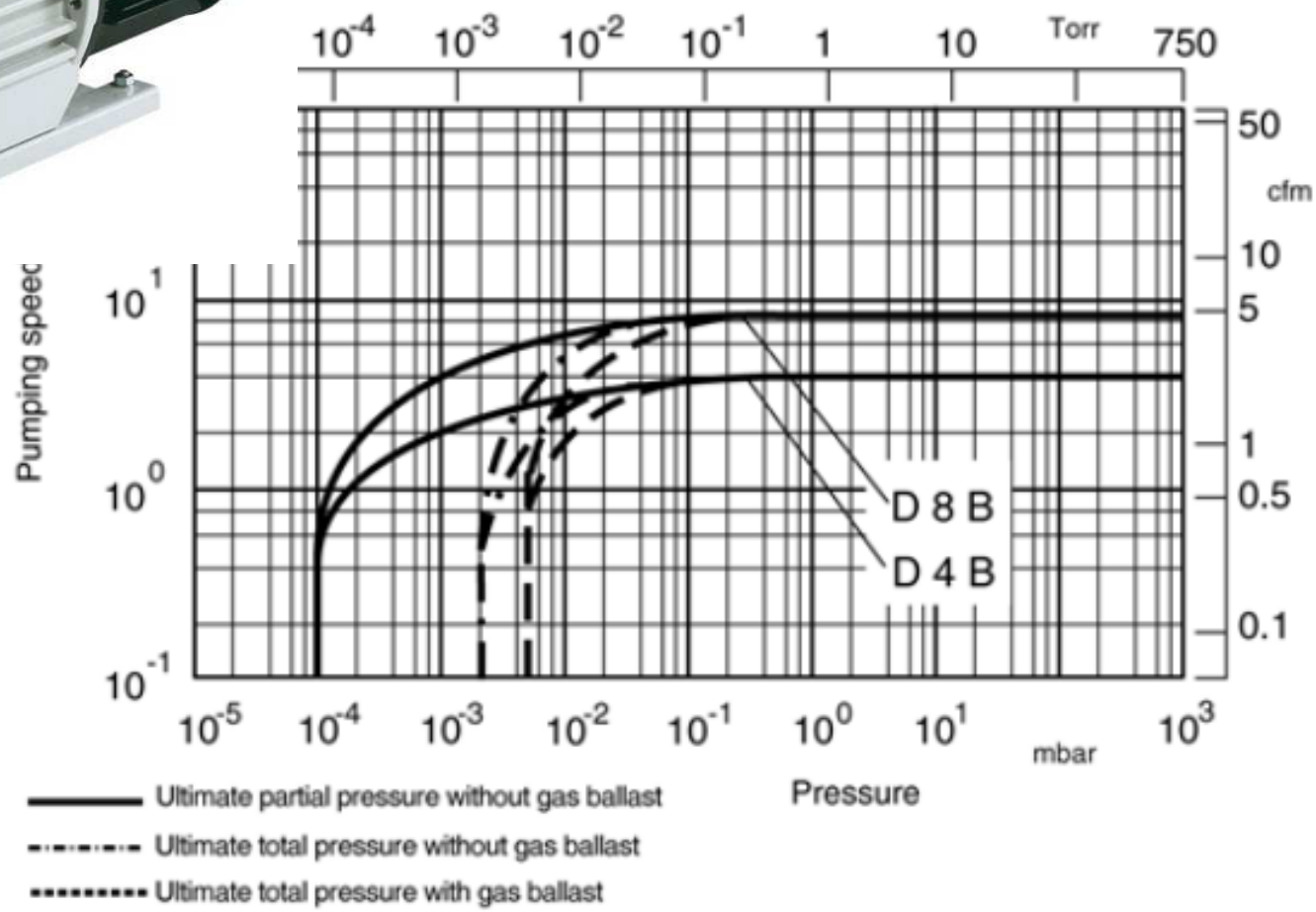

Rotary Vane Mechanical Pumps

- *Spring loaded on eccentric rotors compress gas from inlet to exhaust*
- *Single-stage and two-stage versions are available*
- *Gas displacement speed up to 100 m^3/h*
- *Ultimate pressure for two-stage pumps $<10^{-3}$ torr. Limited by leak through oil-seals and 'dead' volume*
- *Rugged, long-term continuous operations.*
- *Suitable for LV systems, and backing for HV pumps.*
- *Main drawback: oil back-stream*

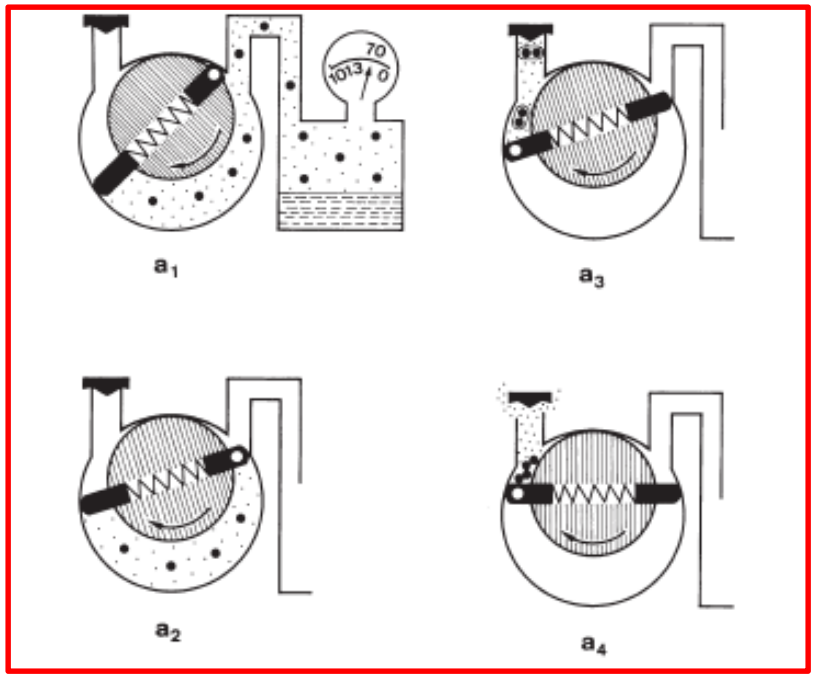

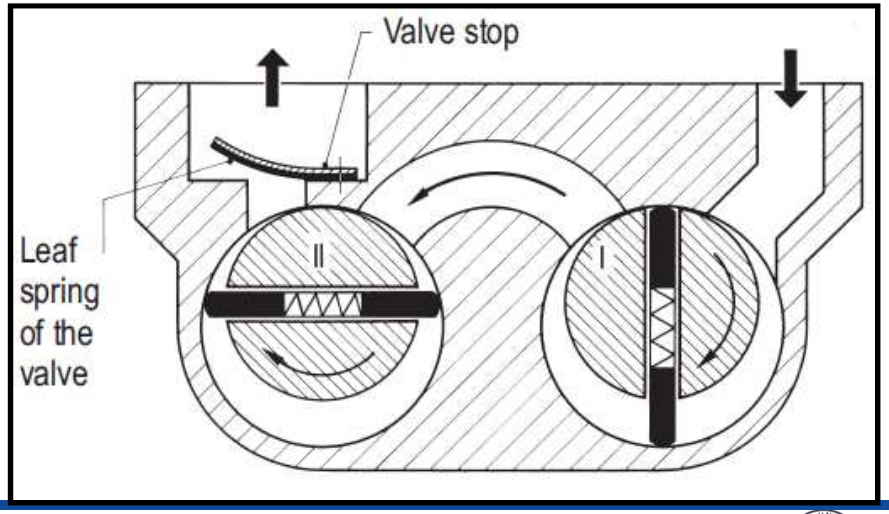

Diaphragm Pumps

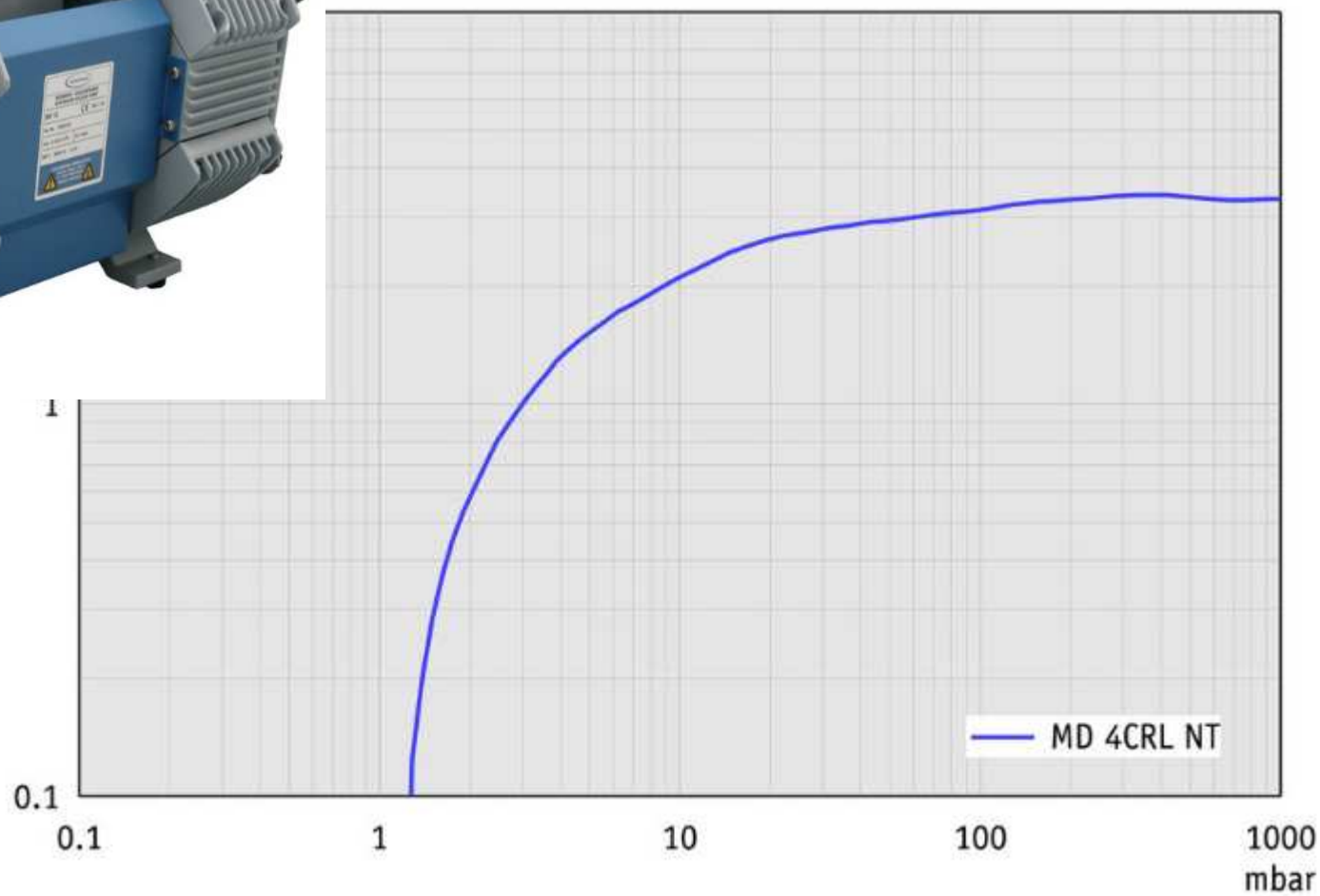

Diaphragm Pumps

- *Dry primary pumps. Usually available in multiple stages (up to 8 stages)*
- *Quiet operations*
- *Ultimate pressure ~ 1 torr*
- *Require more frequent maintenances*

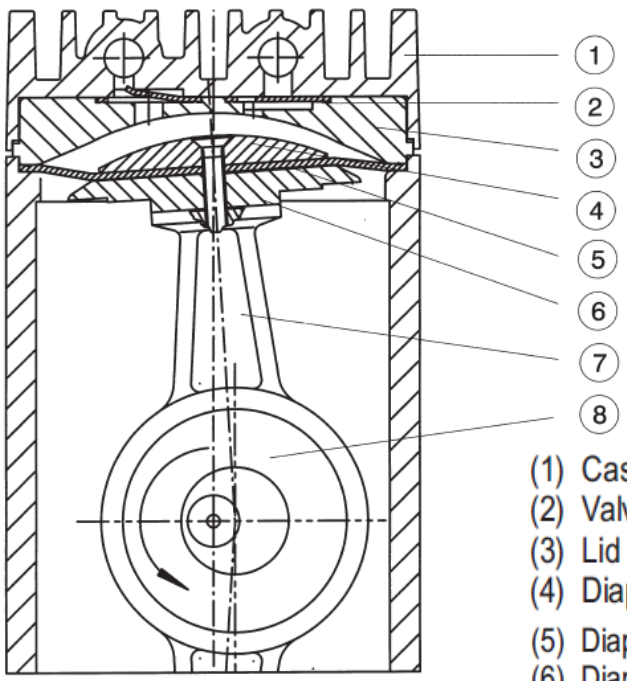

(1) Casing lid
(2) Valves
(3) Lid
(4) Diaphragm disk
(5) Diaphragm
(6) Diaphragm support disk
(7) Connecting rod
(8) Eccentric disk

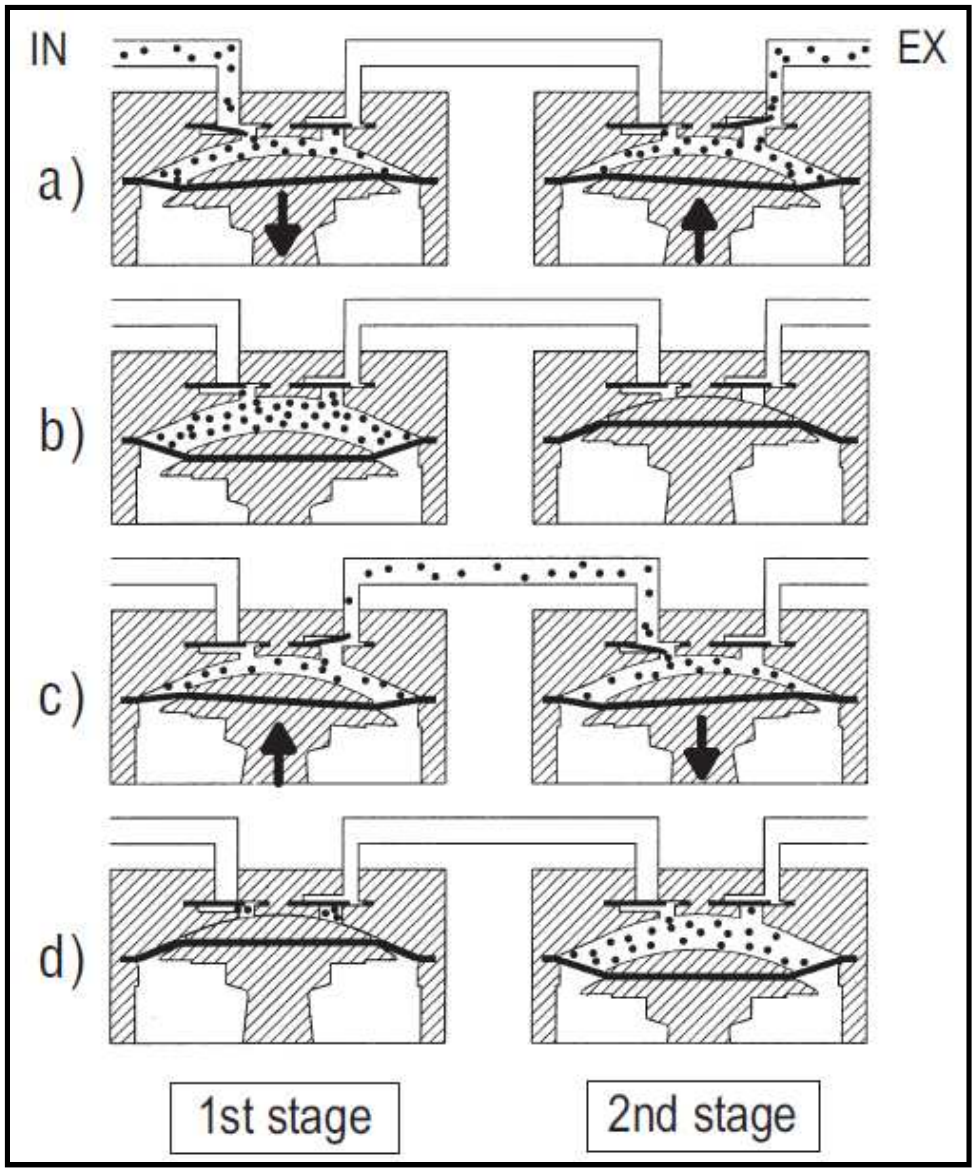

Scroll Pumps

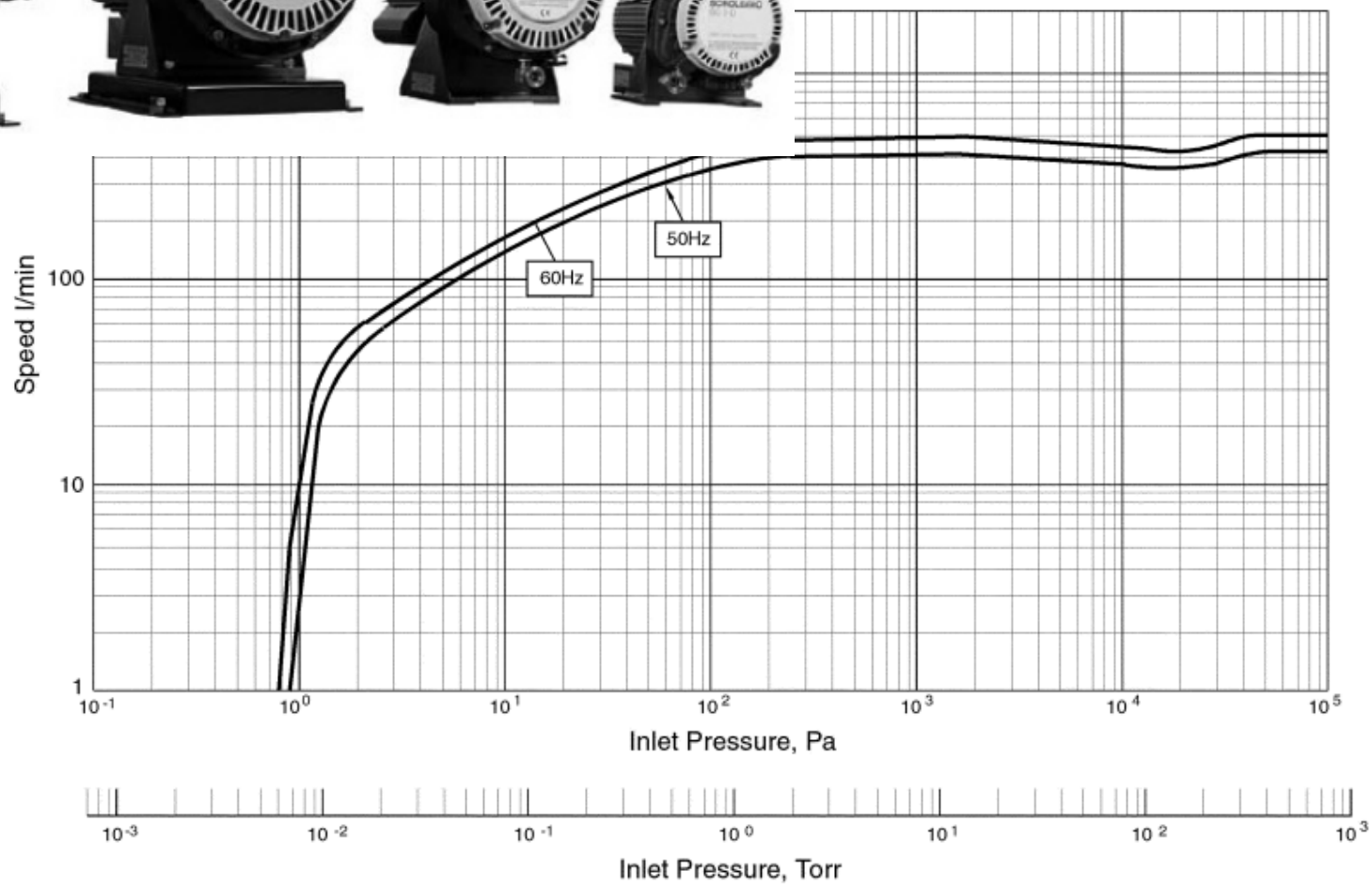

Scroll Pumps

- *The scroll pump is a relative simple dry compressor, with two spiral surfaces, one fixed, on orbiting. Teflon tip seals are commonly used, which are easy to replace.*
- *Pump sizes: 15-40 m^3/h; ultimate pressure ~10^{-2} torr*

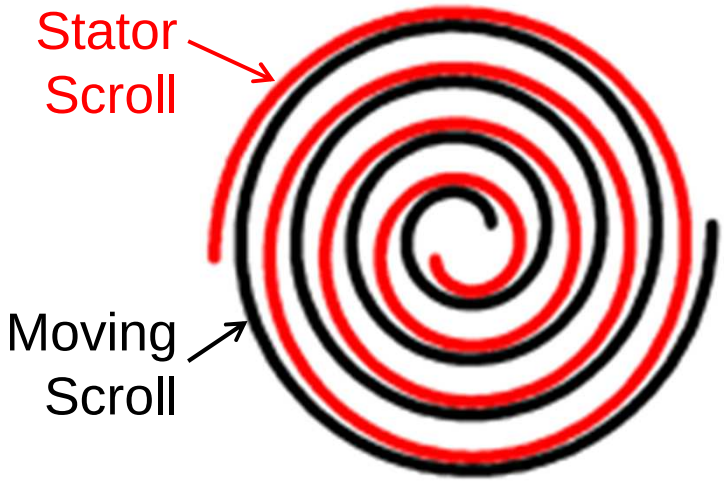

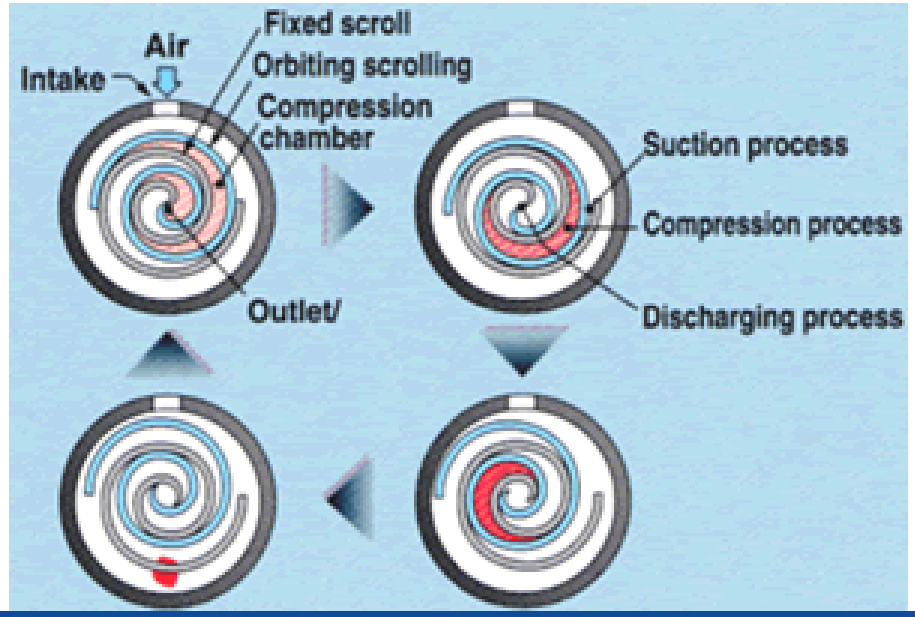

Screw Pumps – Archimedes' screw

The Archimedes' screw, also called the Archimedean screw or screw-pump, is a machine historically used for transferring water from a low-lying body of water into irrigation ditches.

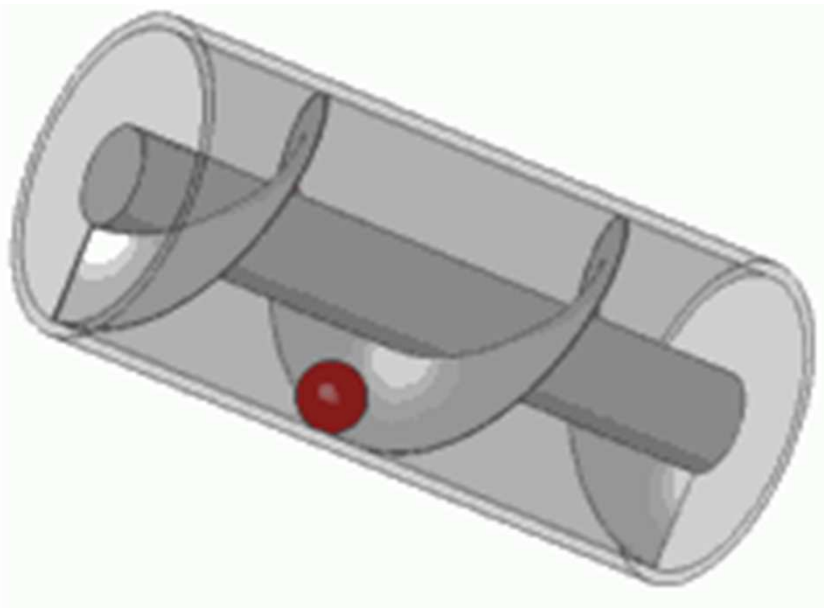

Invented 3rd BC

Still in use today

Screw Pumps – Moving/Compress Gases

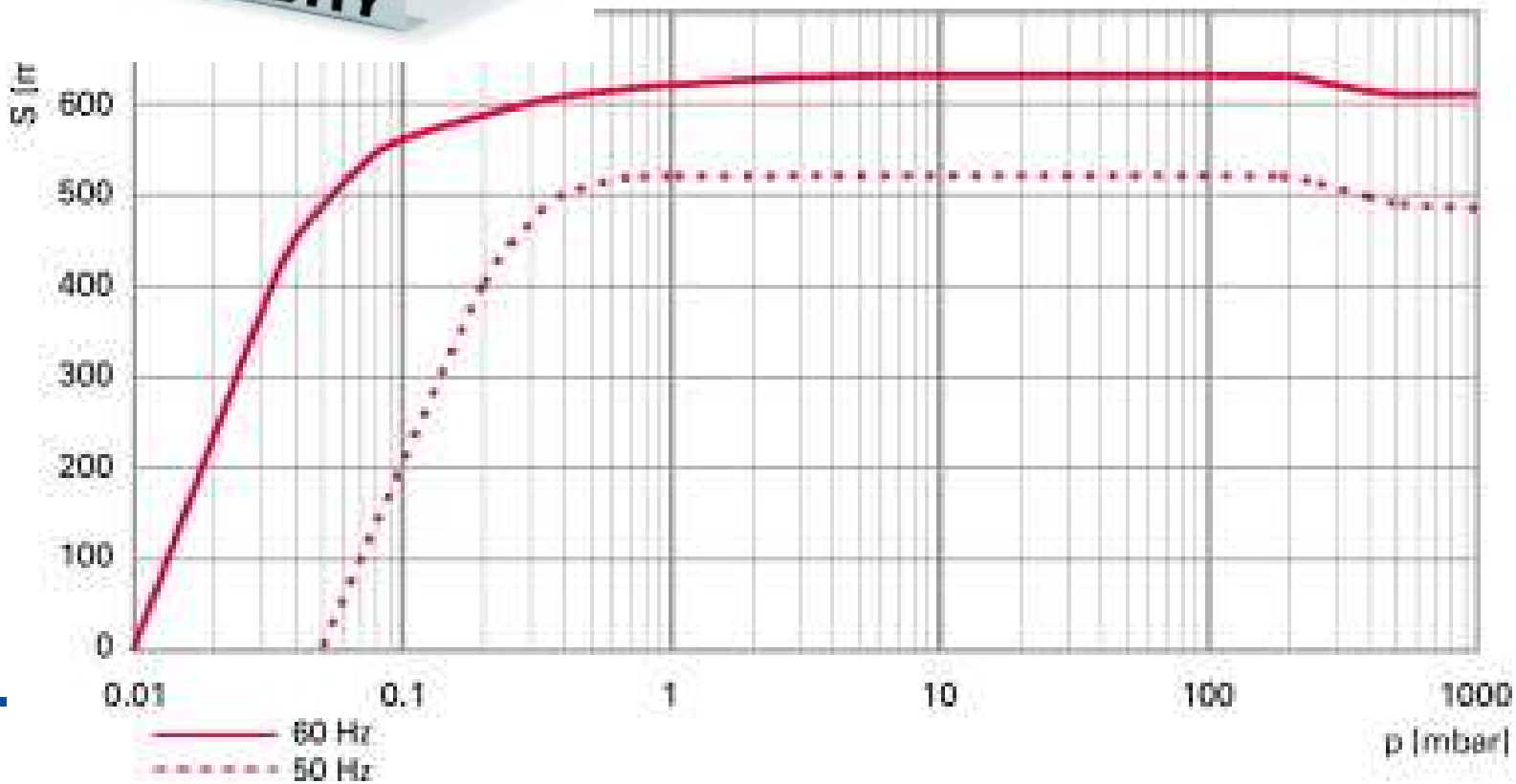

Screw Pumps

- *Screw pumps are dry compressor, consisting of a pair of counter-rotating shafts.*
- *Screws pumps can have very high pumping speed (up to 2500 m^3/h), and lower ultimate pressure ($5x10^{-3}$ torr)*
- *Screw pumps can handle corrosive, abrasive and condensable gases/vapors.*
- *Relatively high cost*

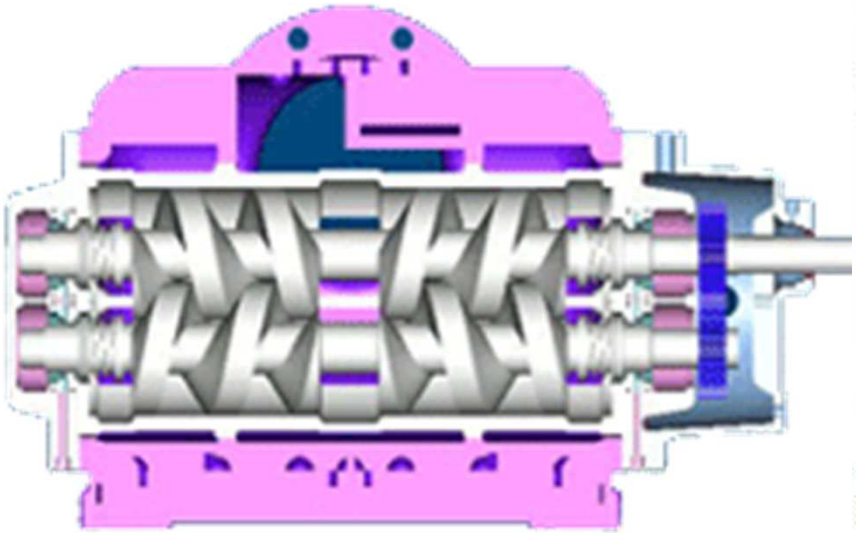

BUSCH Cobra description

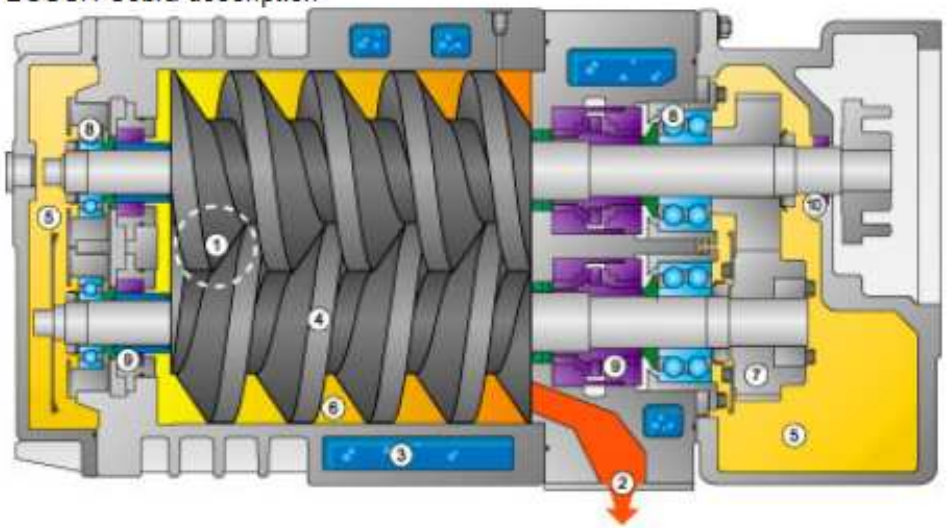

1.Inlet - 2.Exhaust - 3.Water Jacket - 4.Screw - 5.Oil - 6.Gas Path - 7.Timing Gears - 8.Bearings - 9.Shaft Seals - 10. Oil Seal

Lobe-type (Roots) Vacuum Pumps

- *Roots pumps have very high gas displacement speed. Sometime are called blowers.*
- *Roots pumps are generally considered as dry mechanical pumps, but their gear-box contain lubrication oil.*
- *Roots pump usually need a small backing pump.*

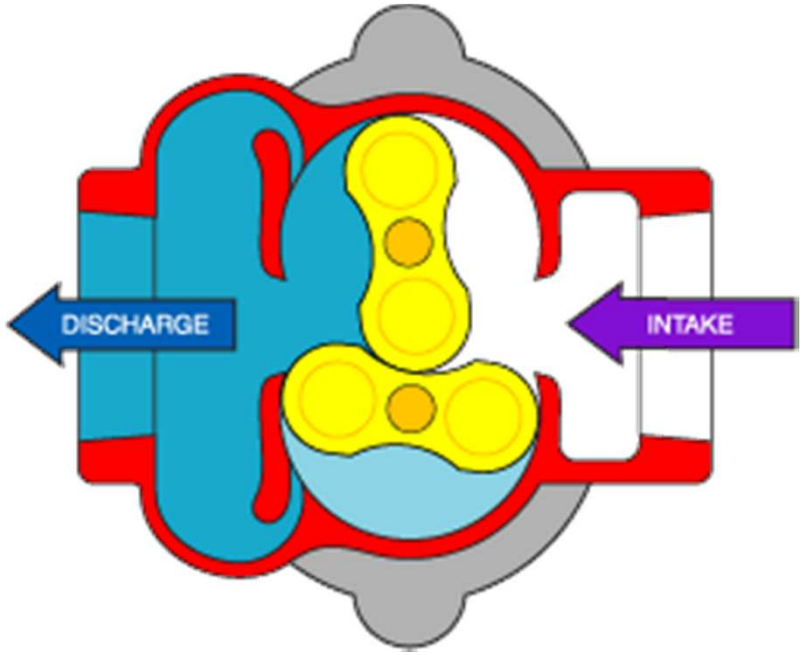

Roots Vacuum Pumps – Examples

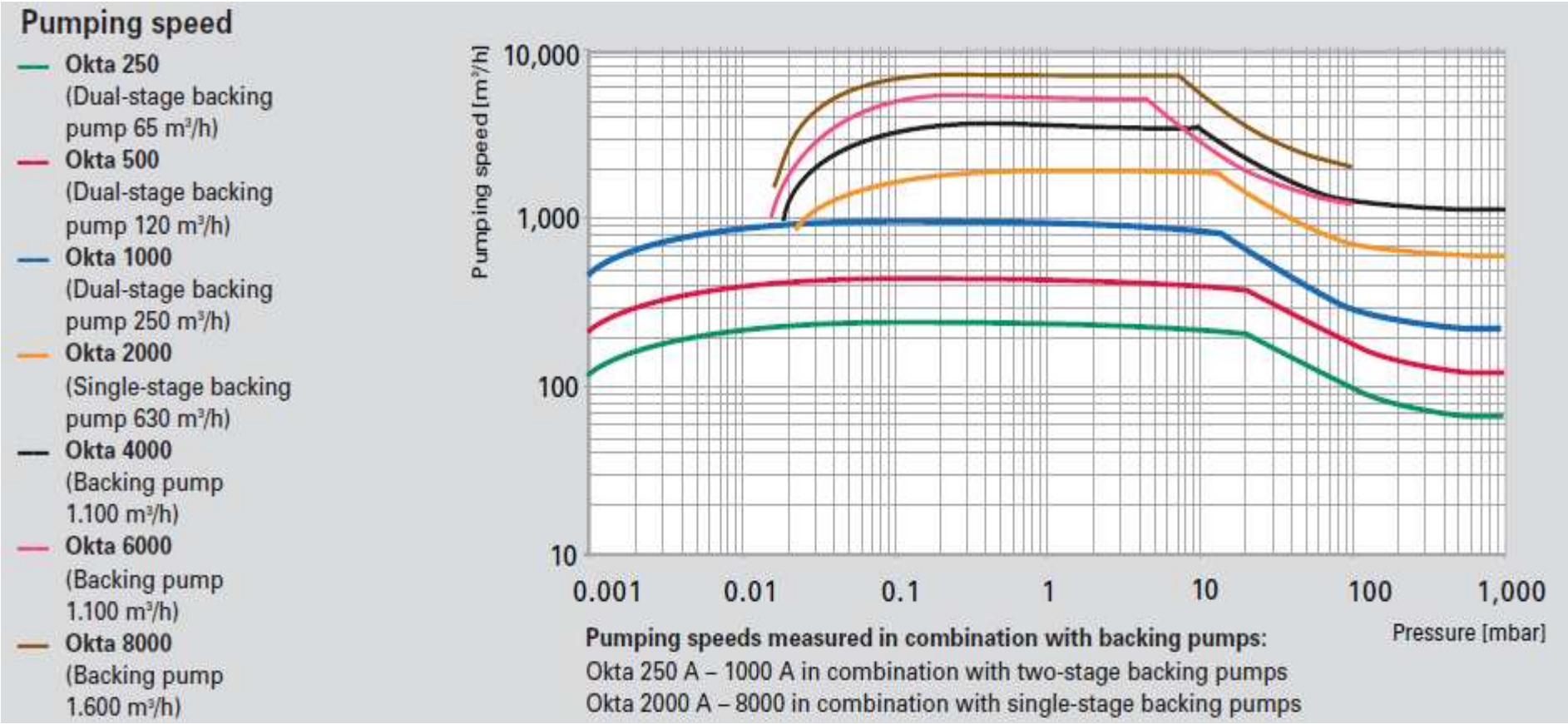

Claw Pumps – Principle

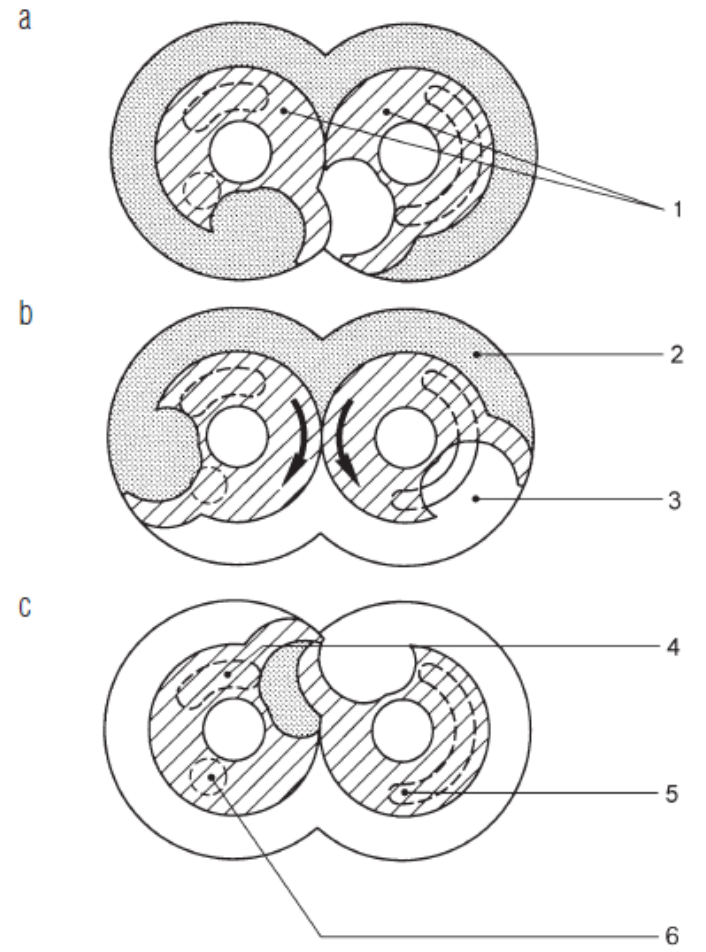

1 Rotors
2 Compression chamber
3 Intake space
4 Exhaust slot
5 Intake slot
6 Intermediate stage purge gas

Claw Pumps – Typical Parameters

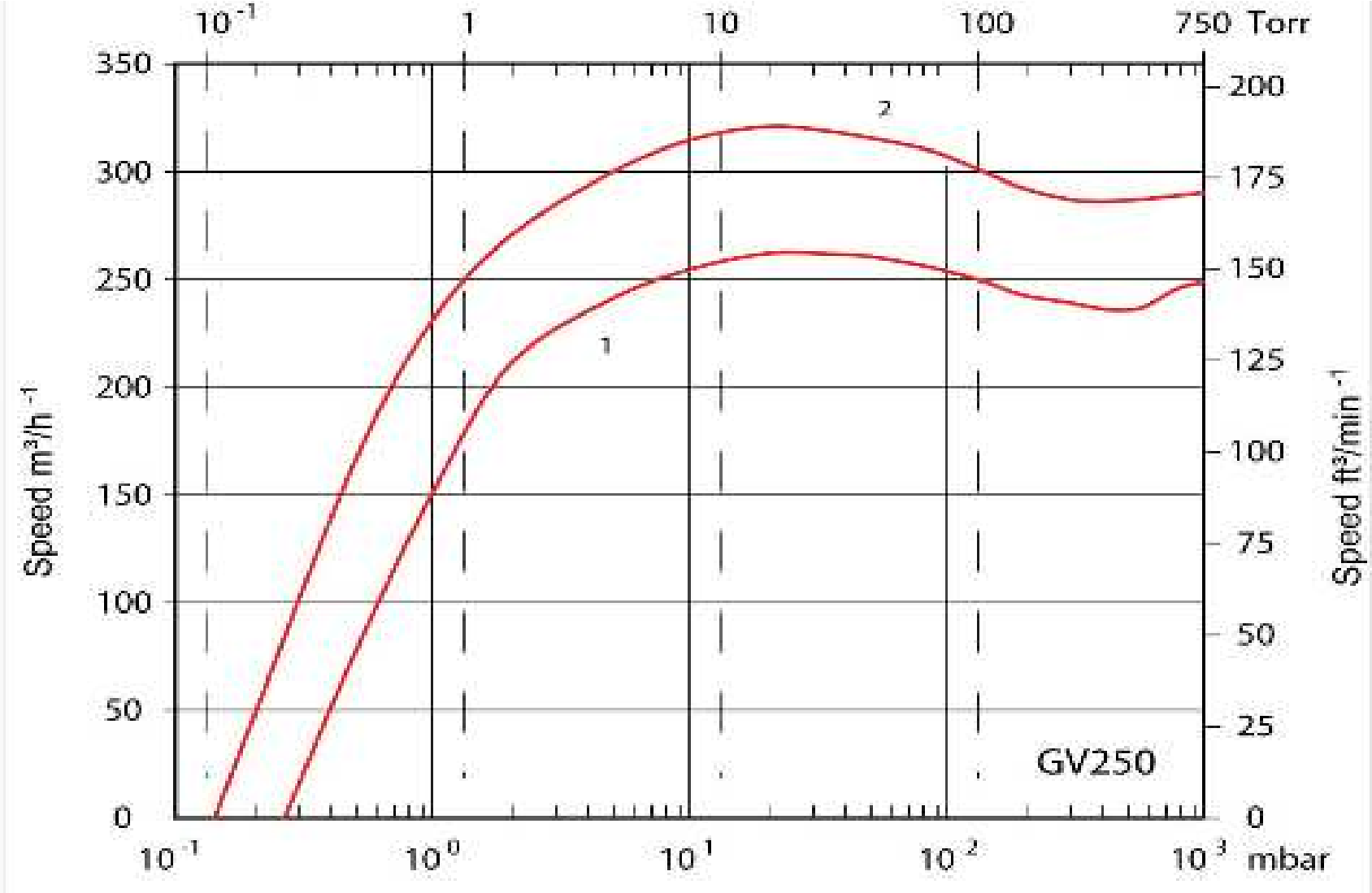

Turbomolecular Pumps (TMPs)

- *TMPs are axial compressors designed for pumping gases in the molecular flow regime. So a backing pump is required.*
- *The gas molecules are transported towards to for-vacuum via momentum transfer from the rotating blades.*
- *Operation range: 10^{-2} to 10^{-11} torr*
- *Pumping speed: 10 to 10,000 l/s*
- *TPMs are throughput pumps, meaning infinite pumping capacity*
- *Blade rotation speed ranges from 14,000 to 90,000 rpm – making them mechanically vulnerable*

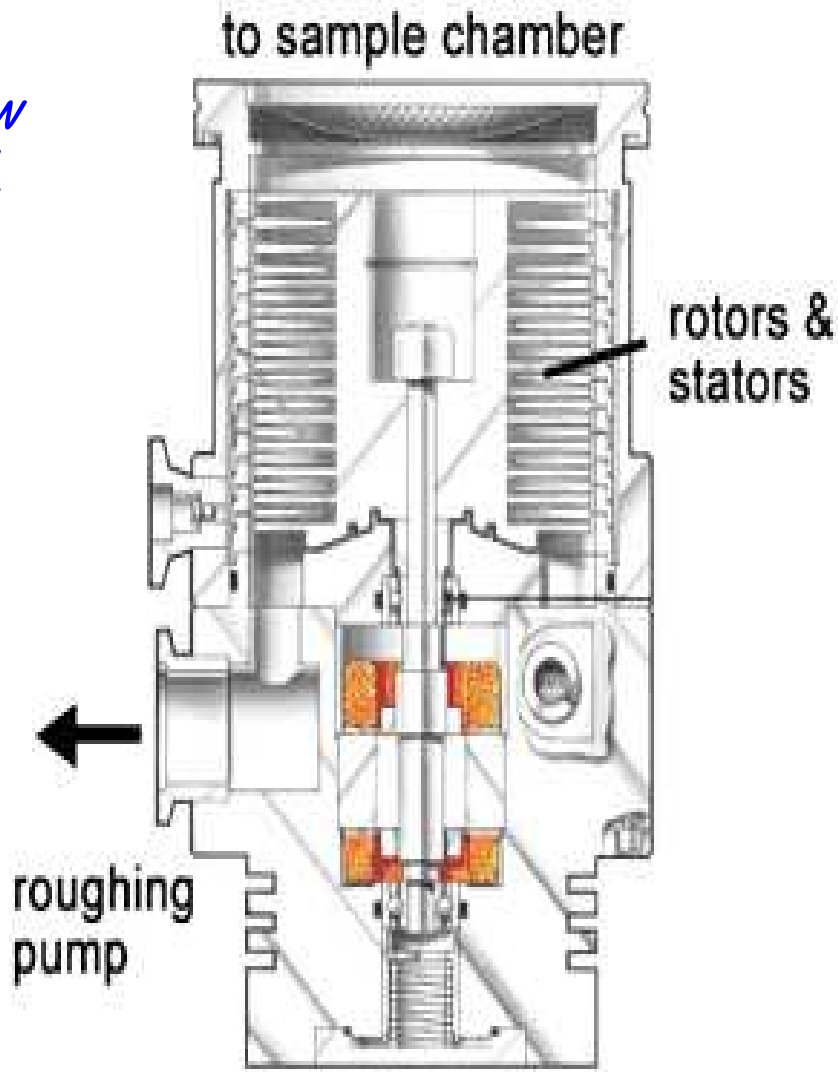

Turbomolecular Pumps (TMPs) Cont.

- Axial compressor type pumps are very flexible designs:
  - → # of stages
  - → Various blade angles
  - → Hybrid pumps
- Molecular flow exists through most of a TMP; however, transient and sometimes viscous flow occurs at the pump discharge.
- The key parameter of TMPs is compression ratio, which is gas mass dependent.
- Typical Compression ratios:
  - → N_2 - 10^8 ~ 10^{10}
  - → He - 10^4 ~ 10^7
  - → H_2 - 10^3 ~ 10^6

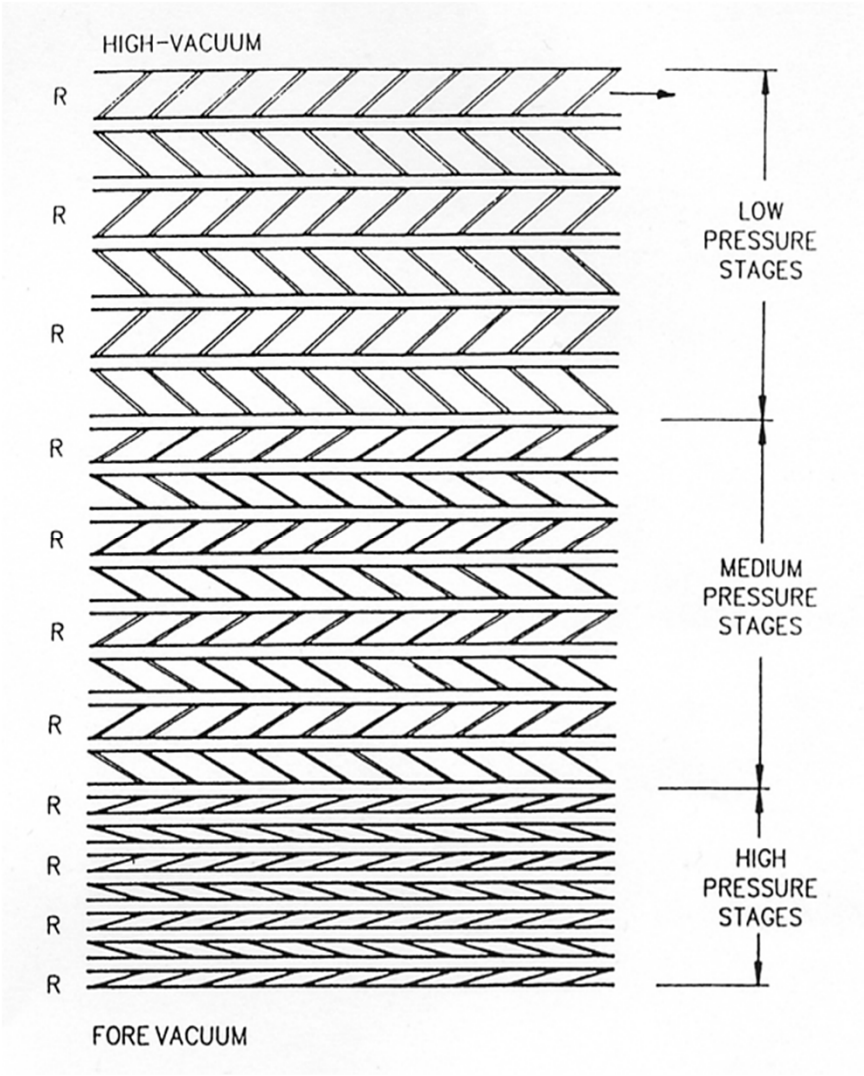

TMP Pumping Mechanism (1)

- *Rotating pump blades accelerate gas molecules in a preferred direction.*

- *To achieve effective compression, the blade tip speed needs to be comparable to the mean velocity of the gas molecules*

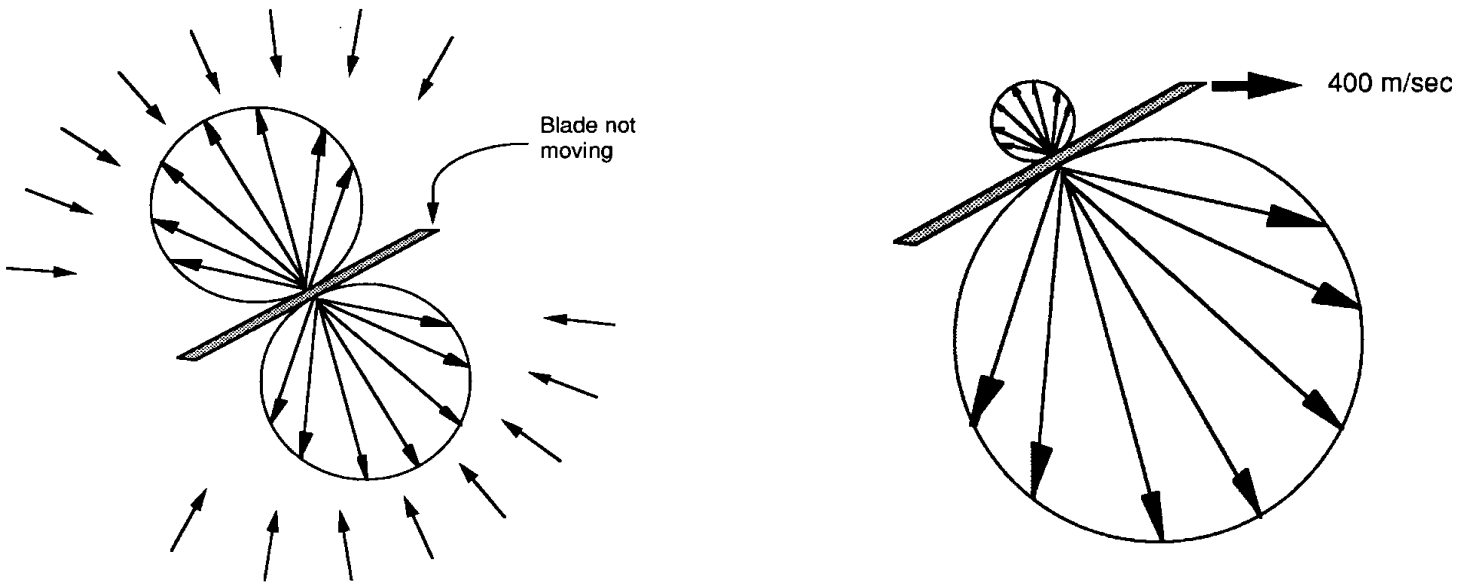

Velocity distribution from moving blades

TMP Pumping Mechanism (2)

- Another way of looking at it, is to consider the rotors as moving "chevron baffles". Their relative movement gives the baffles a higher conductance in one direction over the other.
- Steep rotor blade angles produce higher conductances, which produces higher pumping speeds.
- Shallow rotor blade angles produce higher compression ratios.

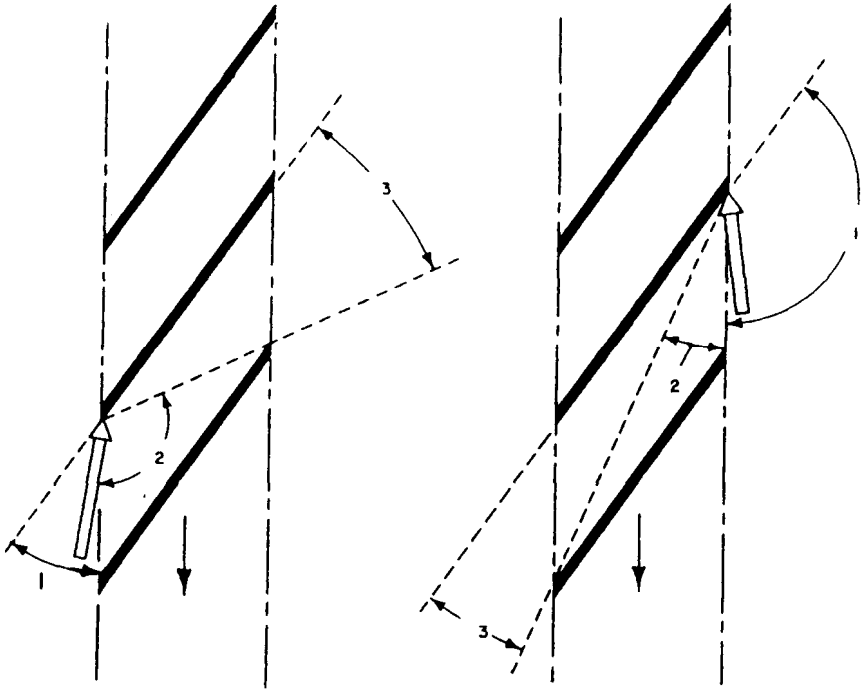

TMP Pumping Mechanism (3)

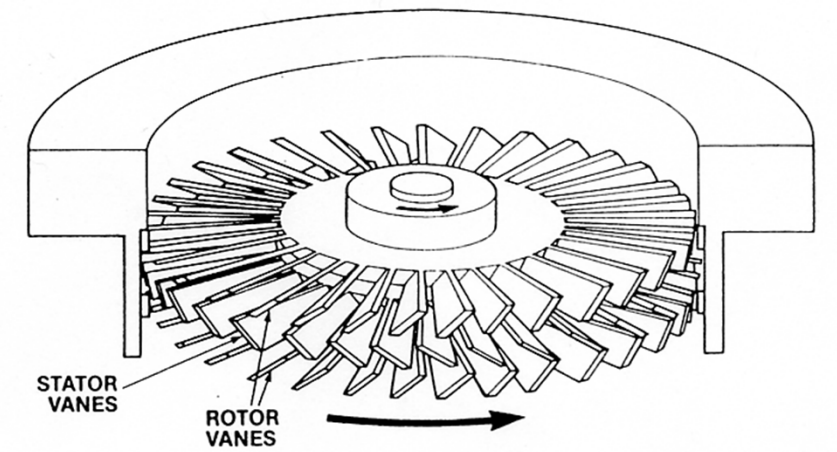

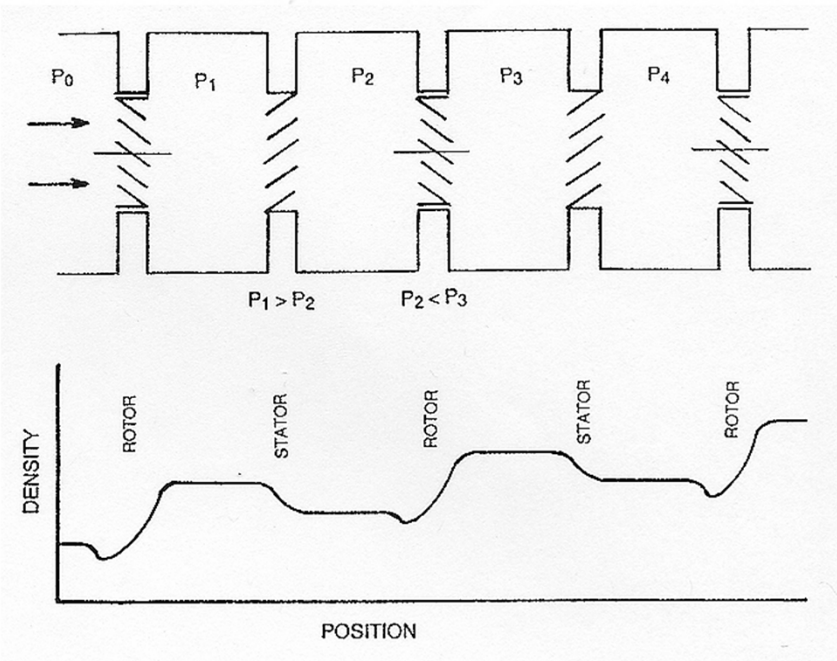

- The stator plays a complimentary role to the rotor.
  1. The stator slows down the gases and,
  2. Increases gas pressure without creating too much of a conductance limitation.
- The stator does it's job in as short a distance as possible.
- Rotors and stators are considered as a "pair" making up a "stage".

TMP Pumping Characteristics

- *Constant compression ratio (k) and pumping speed (S) for inlet pressure up to 10^{-5} torr.*
- *TMPs favor heavier gases. k has much stronger dependence on molecular mass, as compared to S.*

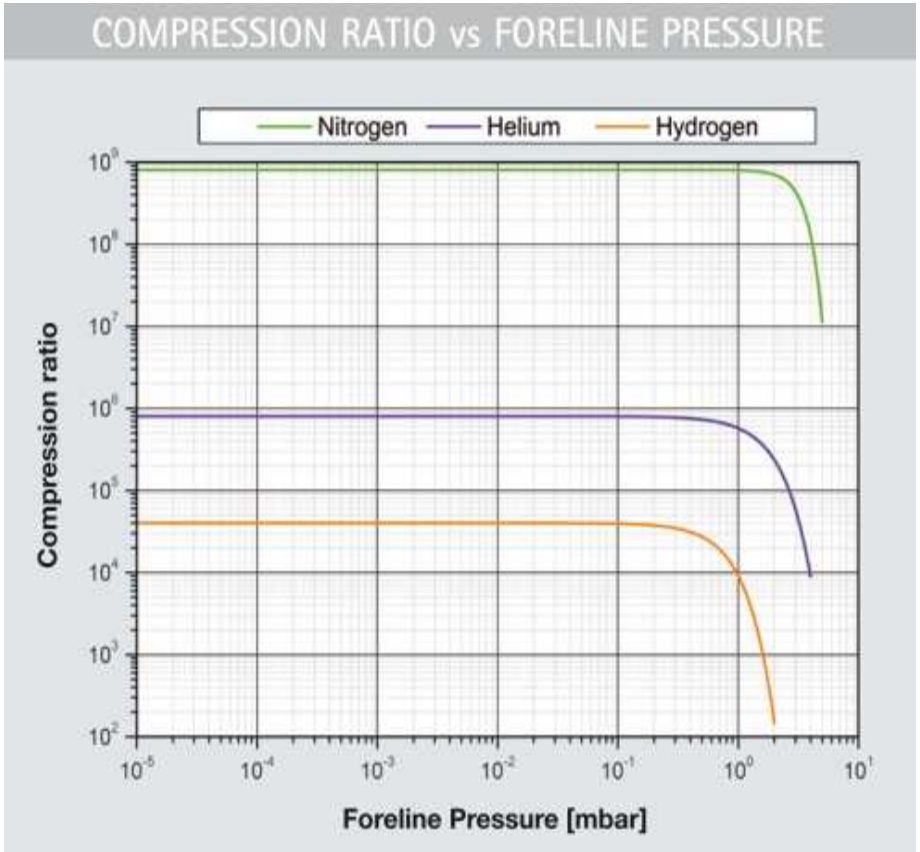

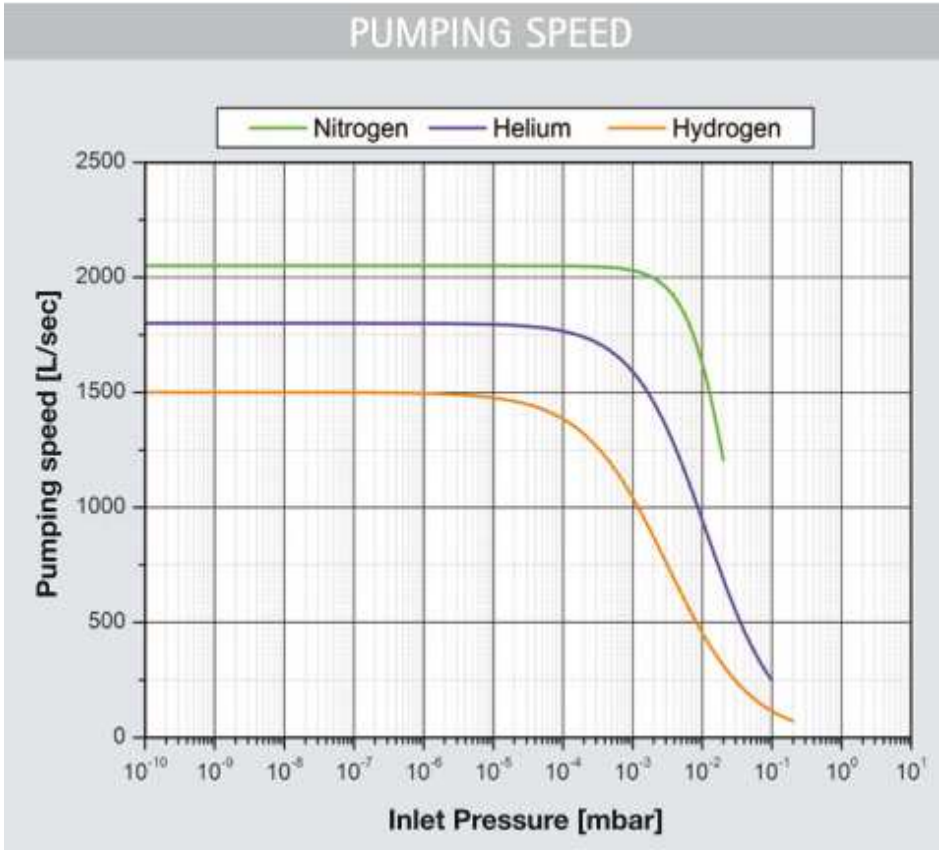

Hybrid TMPs with Molecular Drag Stage

- Most modern TMPs are combined with a molecular drag stage to in crease compression ratio.
- For the hybrid TMPs, backing pressure can be as high as ~ 1 torr.

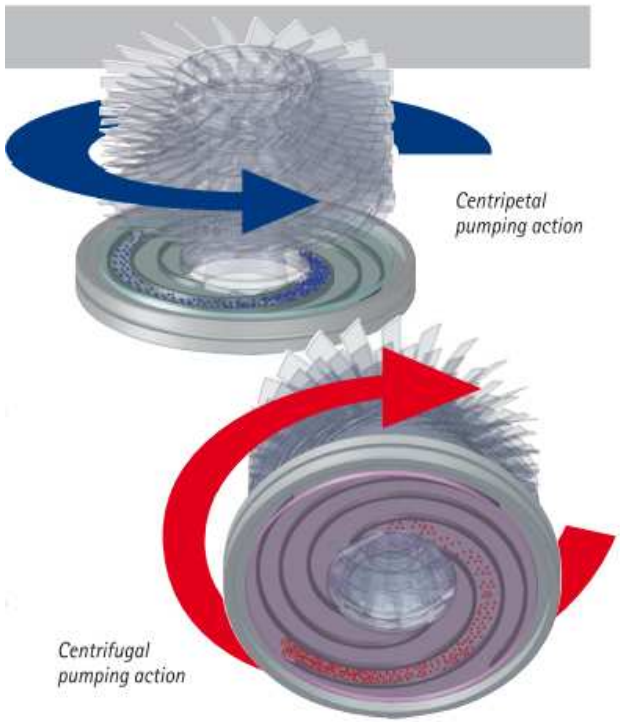

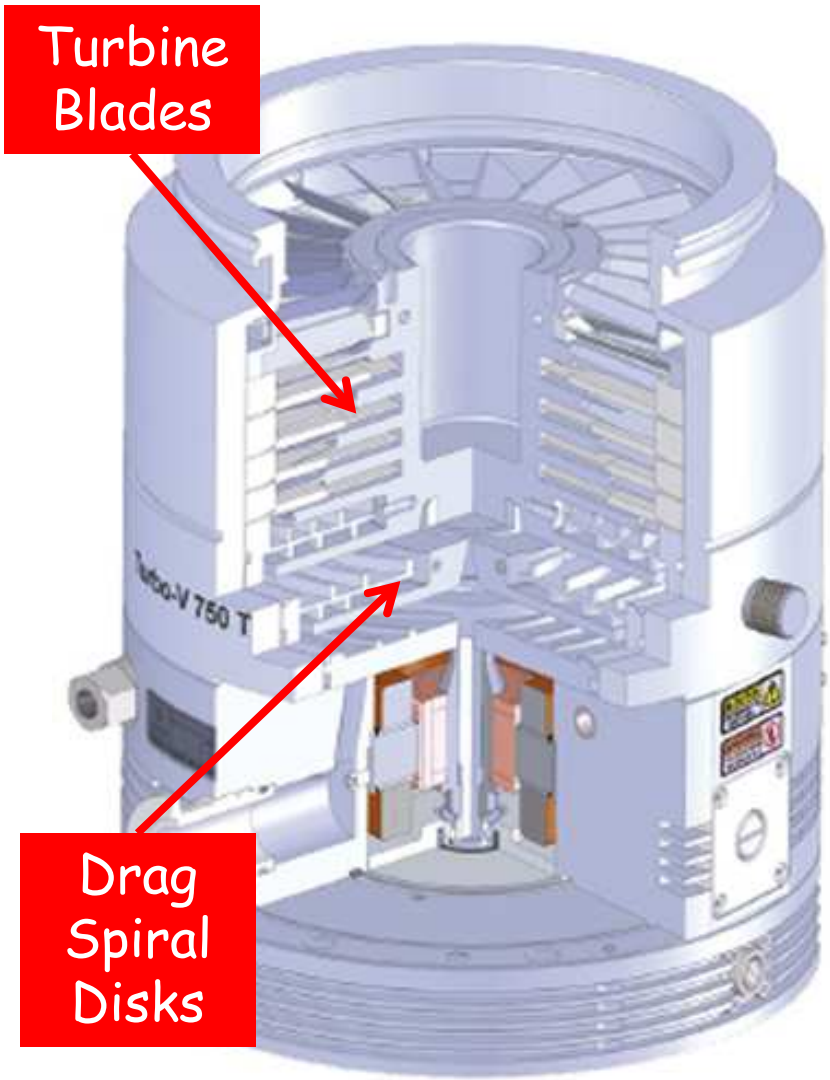

TMPs – Drives and Bearings

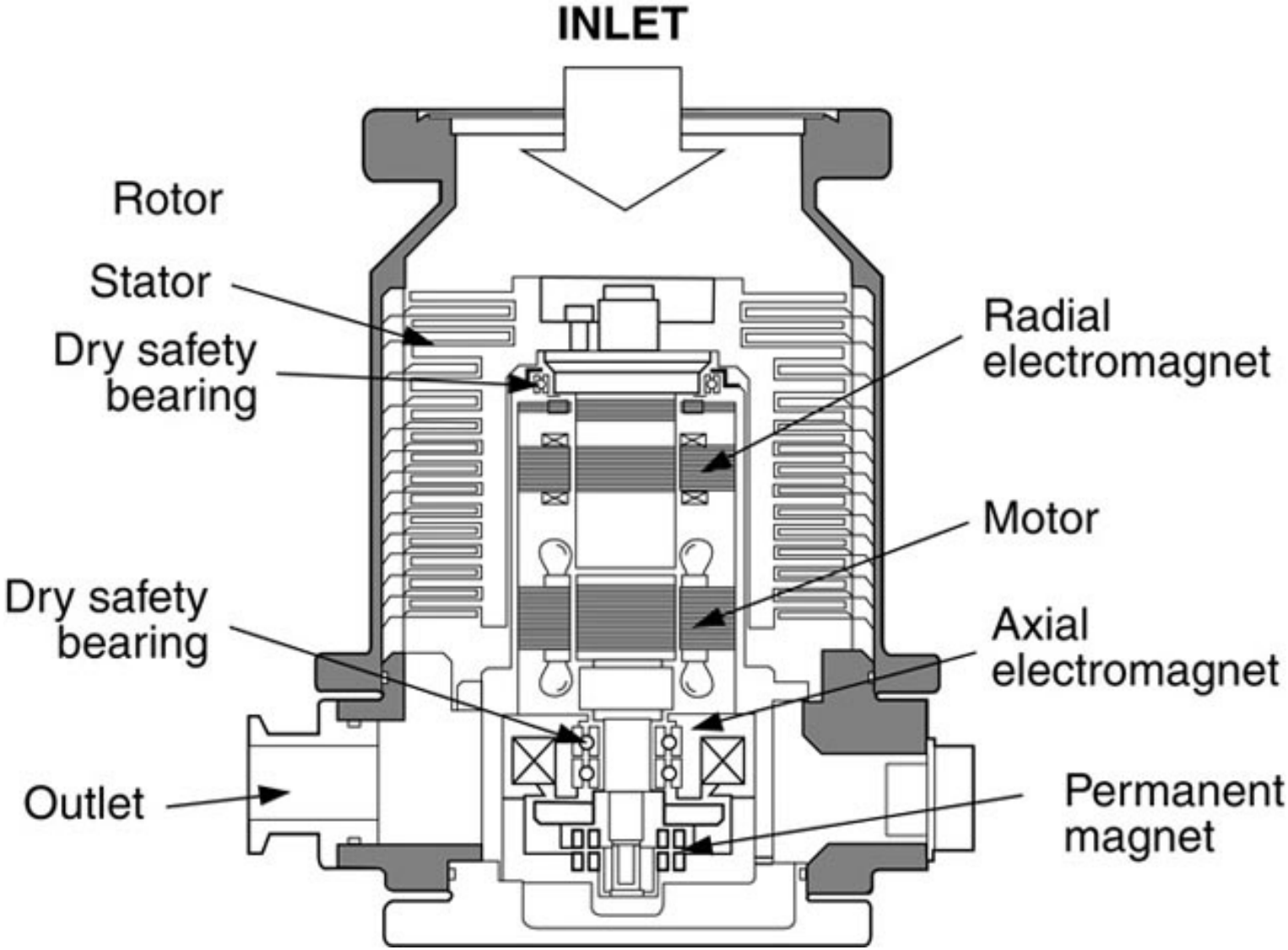

TMPs – Types of Bearings

- *Typical turbine rotation speed range from 36,000 rpm for large TMPs, to 72,000 rpm for small TMPs. Such high speeds naturally raise questions as to a reliable bearing designs.*
- *There are three types of bearings from most TPM vendors*

➢ *Oil lubricated / steel ball bearings*
+ Good compatibility with particles by circulating oil lubricant
-- Can only install vertically
+ Low maintenance

➢ *Grease lubricated / hybrid bearings*
+ Installation in any orientation
+ Suited for mobile systems
+ Lubricated for life (of the bearings)
+ Need cooling (forced air or water)

➢ *Free of lubricants / Magnetic suspension*
+ Installation in any orientation
+ Absolutely free of hydrocarbons
+ Low noise and vibration levels
+ No wear and no maintenance

A Typical Mechanical Pump Cart for CESR

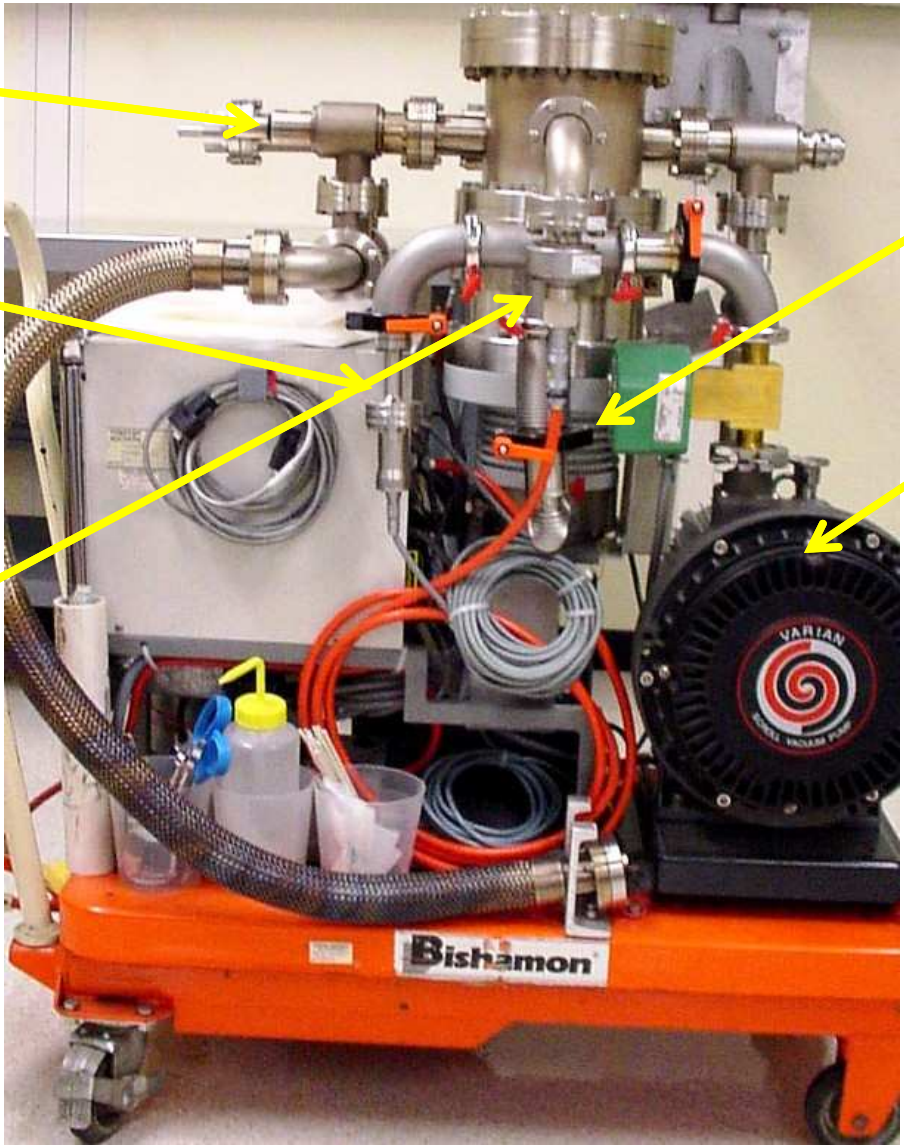

TMPs for Continuous Operations

- *Though capture pumps are preferred pumps for most accelerator vacuum systems, TMPs are suitable for long-term continuous operations for accelerator vacuum systems.*
- *Typical applications are for system with very high gas loads (such as ion beam sources), or specific gases (such as helium, hydrogen, etc. such as insolation vacuum of cryo-modules).*
- *Accelerator protection system is usually implemented to handle power failures, and for routine TMP maintenances. This include pneumatically actuated gate that can isolate the TMP from the accelerator vacuum system. Solenoid fore-line insolation valve should also included in the inter-lock.*

Example of a TMP Pumped Accelerator

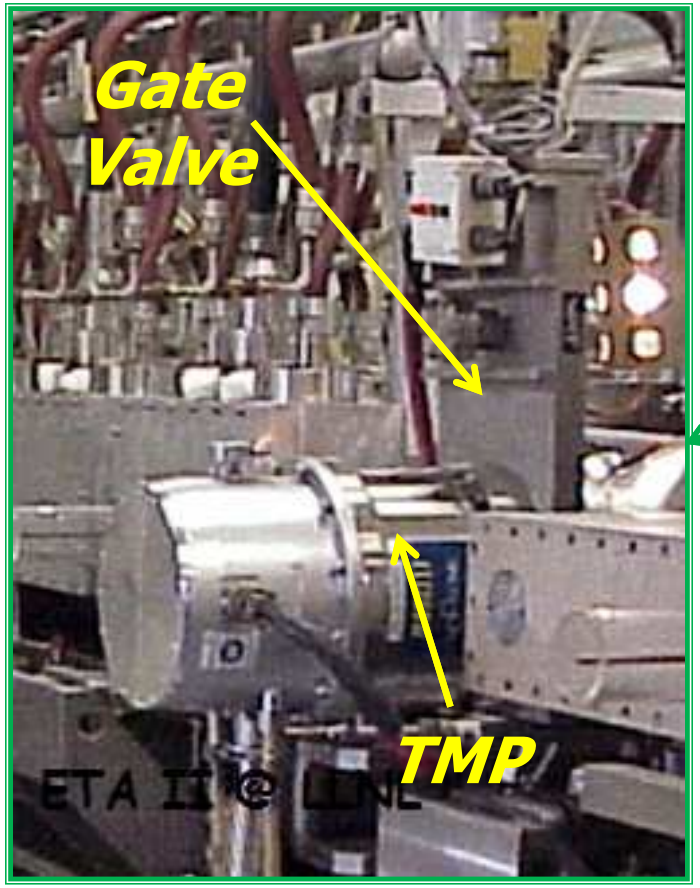

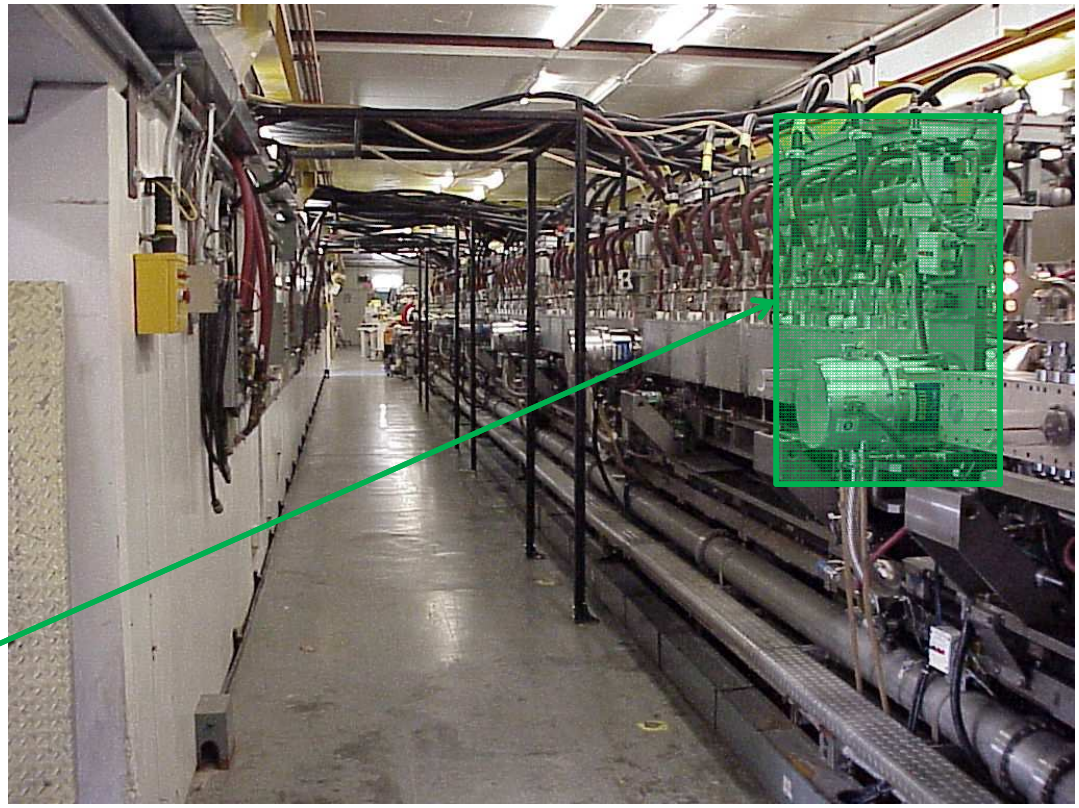

***ETA** (Experimental Test Accelerator) **II** @ LLNL*

Sometimes bad things happen to a TMP

Diffusion Pumps

- *A diffusion pump is a vapor jet pump, which transports gas by momentum transfer on collision with the vapor stream.*
- *Commonly used pump fluids are hydrocarbons and fluorocarbon.*
- *Vapor back-stream can be a source of contamination.*
- *However, with proper cold traps, the vapor back-stream can be minimized significantly, so it can be used for HV and UHV systems.*
- *Diffusion pumps are extremely reliable, and require minimum maintenance. For example, for CESR's booster (the Synchrotron), we needed oil change every 30 years!*

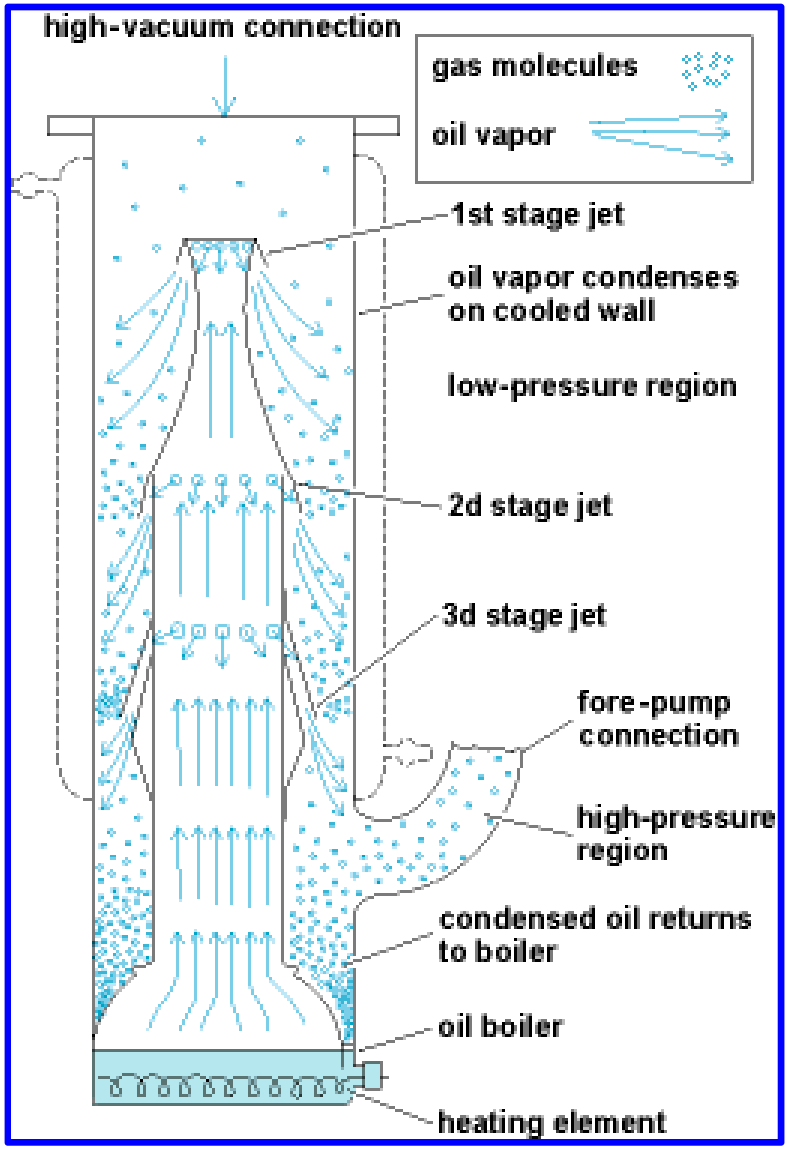

Diffusion Pump Characteristics

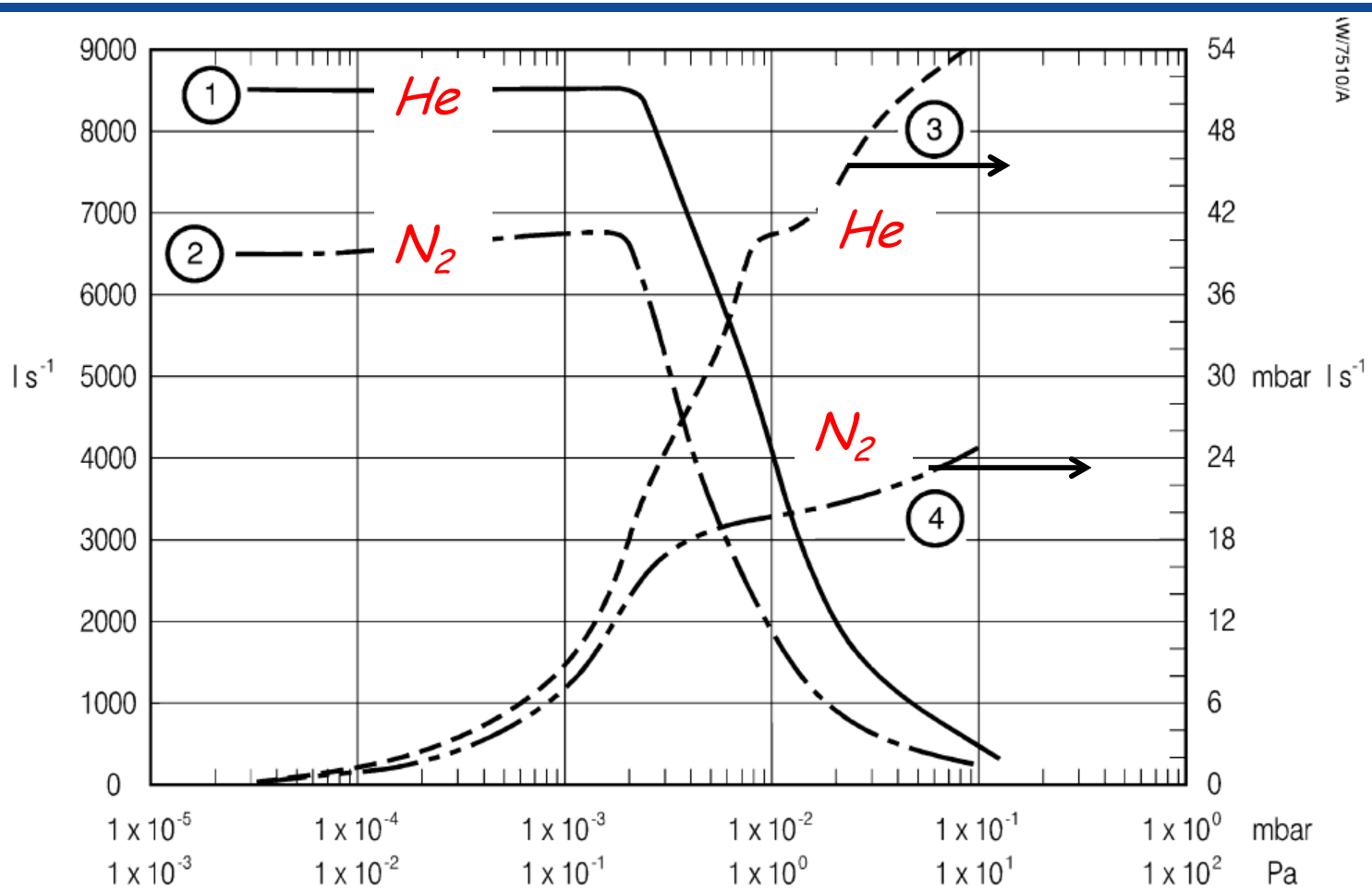

Unlike TMPs, diffusion pumps favoring light gases