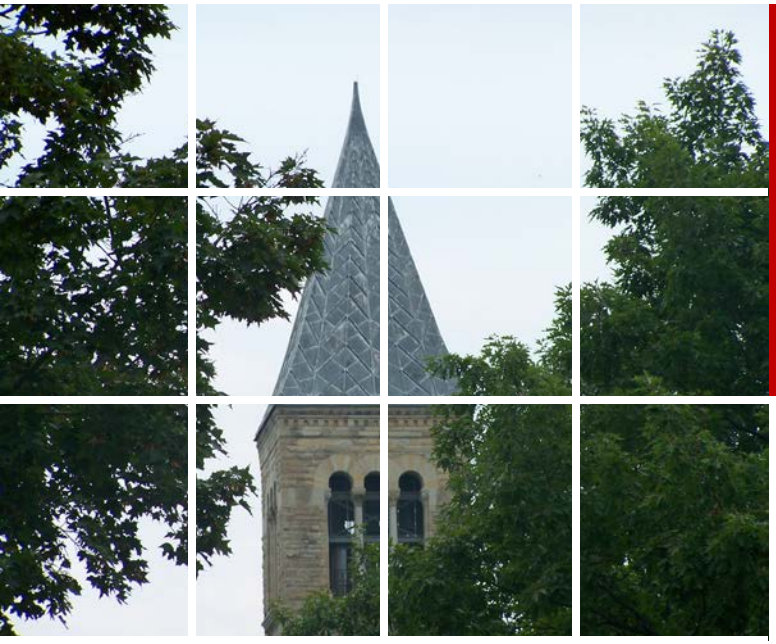

Vacuum Science and Technology for Accelerator Vacuum Systems

Yulin Li and Xianghong Liu
Cornell University, Ithaca, NY

Old Dominion University

Cornell University Founded A.D. 1865
Cornell Laboratory for Accelerator-based Sciences and Education (CLASSE)

USPAS

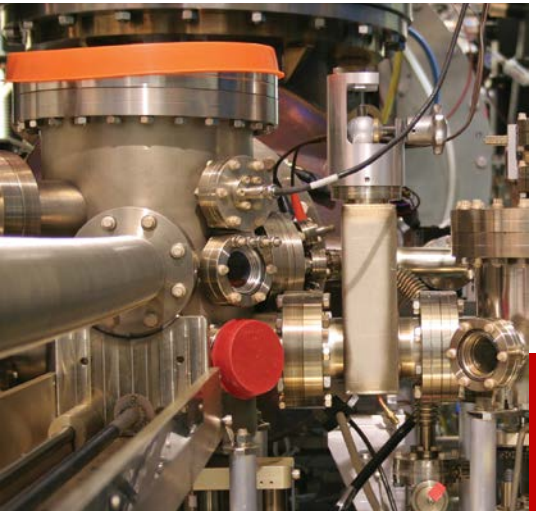

Table of Contents

- Vacuum Fundamentals
- Sources of Gases
- Vacuum Instrumentation
- Vacuum Pumps
- Vacuum Components/Hardware
- Vacuum Systems Engineering
- Accelerator Vacuum Considerations, etc.

SESSION 6.1: Vacuum System Engineering

- Typical vacuum system design/engineering flow
- High vacuum system design considerations
- Ultrahigh vacuum system design considerations
- Tools for vacuum system engineering
- Vacuum system integration

Typical Vacuum System Design Flow

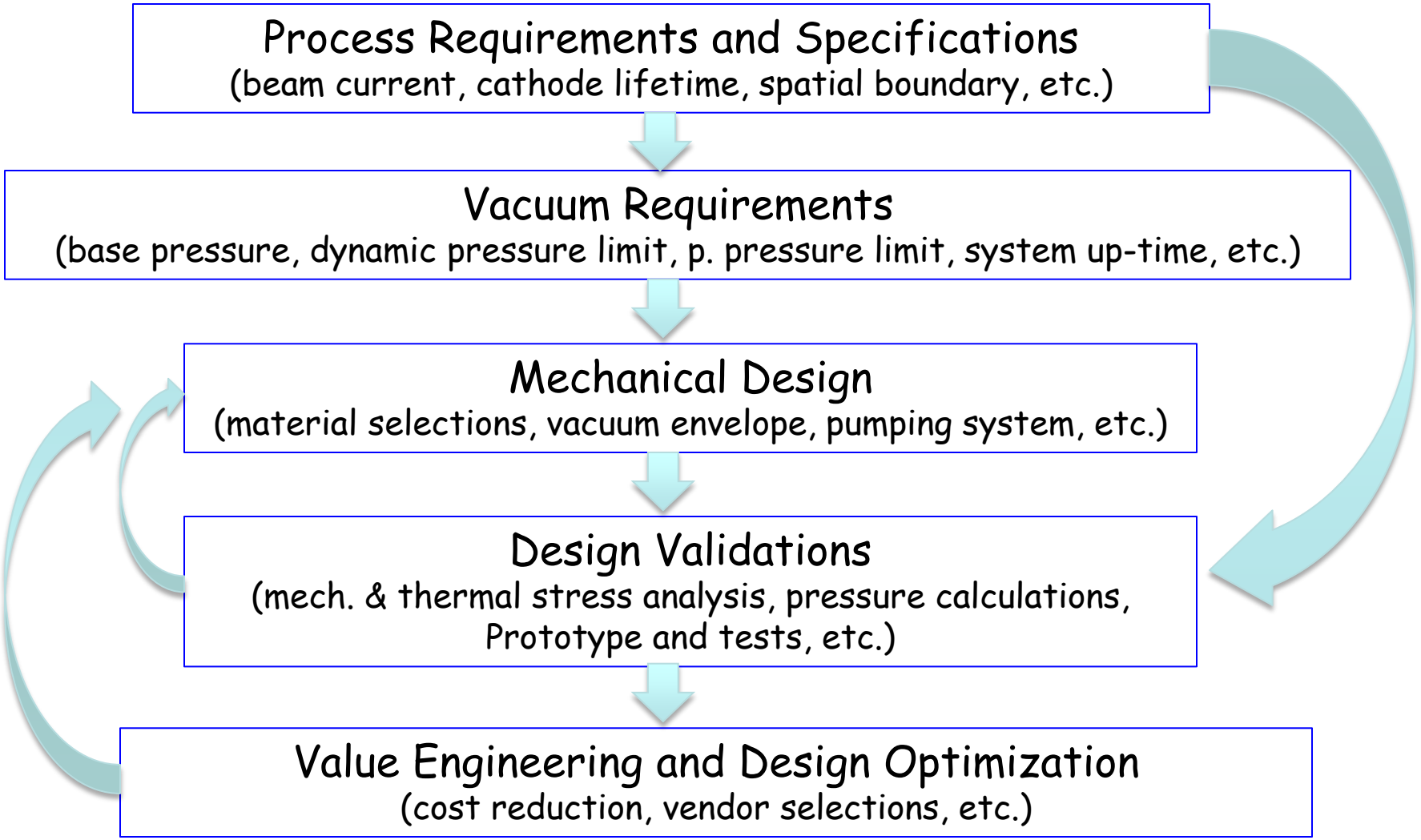

Accelerator Vacuum Design Considerations

- Particle beam parameters
  - → Type of particles: e^-, e^+, p^+, ions, etc.
  - → Beam density
  - → Beam temporal and spatial properties, etc.
  - → …, …
- Magnets – Mainly spatial constraints
- Accelerating RF cavities
  - → Particulate control – ultra-clean vacuum systems
  - → 'Free' cryo-pumping for SRFs, but handling of warm-ups
  - → Cryo related issues (insolation vacuum, etc.)
- Key functional accelerator components
  - → SR generation insertion devices – in-vacuum and/or ex-vacuum
  - → Particle sources – electron and positron, protons, ions, etc.
  - → Beam instrumentations – BPMs, BSMs, BCMs, Collimators, etc.

Vacuum Pressure Considerations

1. Base pressure

   → *For e^-/e^+ storage rings, base pressure usually an order of magnitude below beam induced dynamic pressure, typically in the low 10^{-10} torr range*

   → *For high intensity proton and heavy ion machines, there are more demanding requirements on the base pressure, as beam-gas interaction is much sensitive*

   → *For some special devices, such as photo-cathode electron sources, XHV environment is essential for the cathode lifetime*

2. Dynamic pressure

   → *For e^-/e^+ storage rings, the dominating dynamic pressure rise is due to photon-induced desorption from intense SR. The maximum pressure must be controlled to a level such that the beam-loss from beam-gas interaction is below the other factors.*

   → *For p^+ and ion machines, SR usually negligible. The dynamic pressure rise is primarily due to lost particles. Though beam loss is small, proton/ion induced desorption is much higher than PSD.*

   → *Other collective effects (such as electron cloud, HOM heating, etc.) may also induce (usually nonlinear) pressure rises.*

High Vacuum Systems

- *High vacuum system is dynamic pressure in range of 10^{-6} to 10^{-9} torr*
- *Examples of accelerator high vacuum systems:*
  → Low beam intensity LINACs
  → Low beam intensity energy booster rings for storage rings
  → Insolation vacuum for cryo-modules
- *For these systems, often discrete pumps are sufficient. Typical pumps used are ion pumps, diffusion pumps, cryo-pumps and turbo-molecular pumps.*
- *For cryo-module insolation vacuum, though with 'build-in' cryo-pumping from cryogenic surfaces, sufficient contingency pumping system must always included to deal with possible internal helium leaks.*
- *Material selection for high vacuum systems is usually dictated by cost and easiness of fabrications. Though cleanness is not as critical, a clean system will reduce cost of pumping system.*

Ultra-High Vacuum Systems

- *UHV system is dynamic pressure in range below 10^{-9} torr*
- *Examples of accelerator UHV systems:*
  → Electron storage rings for light sources and colliders
  → High intensity proton and ion machines
  → High intensity LINACs
- *For these systems, often distributed pumps are needed with gas conductance limited beam chambers, and distributed dynamic gas load. Only UHV-compatible pumps should be used, including ion pumps, NEGs and TiSPs.*
- *In most cases, only UHV compatible metals should be used for these systems. Stringent cleaning and UHV-compatible handling is paramount. Only all-metal joints are permitted.*
- *UHV ion gauges must be included in the UHV system. RGAs are strongly recommended for vacuum diagnostics.*
- *UHV system roughing and venting needs significant cares.*

Beam Chamber Materials – Electric and Thermal

- For high beam intensity accelerators, beam pipe material with high electric conductivity must be used for carrying image wall current.
- For beam chambers not subject to direct power deposition from synchrotron radiation or particle bombardment, stainless steel with copper coating/plating/lining is an option. The thickness of the copper coating only need to be a few factors of skin-depth at fundamental beam RF frequency.
- For beam chambers intercept SR power, or intense particle impingement, material with good bulk electric and thermal conductivities must be used. Aluminum alloys, copper or copper alloys are usually used.

Chamber Design – Mechanical Consideration

- *In many beam chamber designs, there are often competing requirements to provide adequate beam aperture, while to bring magnet poles close to particle beam.*
- *These requirements may lead to minimizing chamber wall thickness and complex chamber shapes. Thorough mechanical analysis of chamber stress under atmospheric pressure must be carried out. Commercial finite-element analysis (FEA) tools, such as ANSYS, are used to validate a design.*

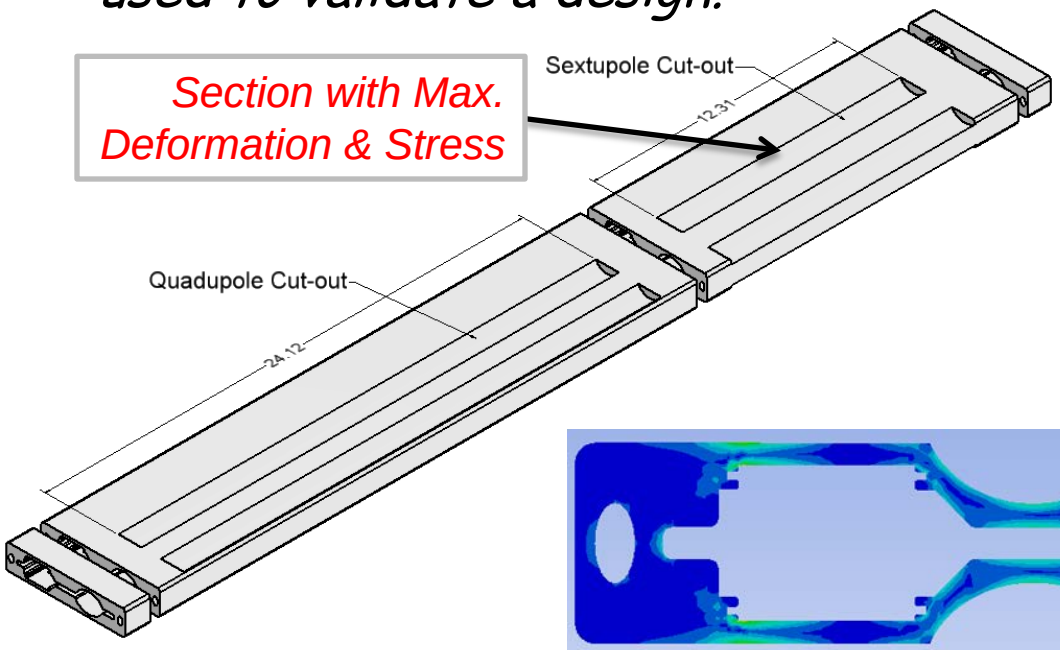

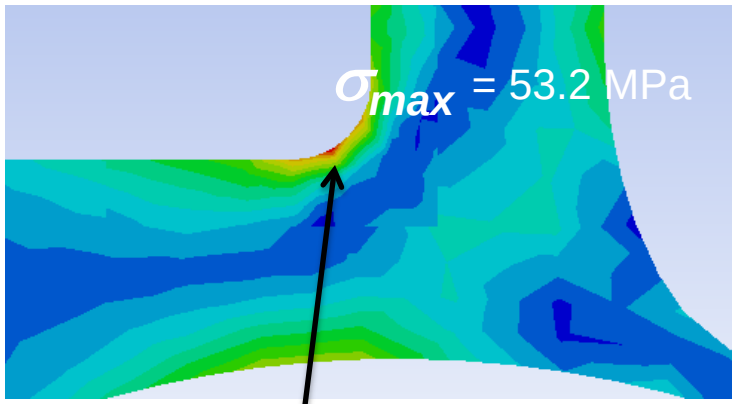

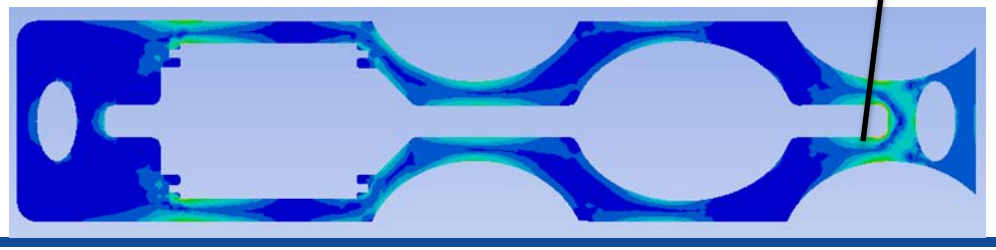

Mechanical Consideration Cont.

FEA results are not always the final word, if the material property inputs are incorrect (or not available). A copper beam chamber deformed severely during a 150°C bakeout, though FEA results predicted a 'healthy' safety margin at the temperature!

Distorted copper chamber during a bakeout

The chamber was saved by pressurizing and stiffening

Synchrotron Radiation in e^-/e^+ Storage Rings

- *For high beam current electron storage rings, SR power deposited on vacuum walls must be calculated.*
- *The calculated SR power distribution will be used to evaluate vacuum chamber design, to ensure*

  (1) adequate cooling is provided to keep heating and thermal stress below a safe level;

  (2) no part of wall is subject to higher SR power that cannot handle by the wall materials;

  (3) proper 'masks' are in place to shadow components that may be damaged or affected by SR.
- *For simple wall profiles, one can use the following formula for linear power density. The area power density can be calculated with a vertical SR angular spread of $\alpha_v = 1/\gamma$, where $\gamma = E_{beam}/E_{rest}$.*

$$P(W/mA) = 88.5 \frac{E^4(GeV)}{R(m)} \frac{\Delta\alpha}{2\pi}$$

Synchrotron Radiation Calculations – SYNRAD

- *For more complex accelerator vacuum wall profile and SR-generating magnet arrangement, computing program is usually employed for SR calculations.*
- *In CESR, a program, SYNRAD, integrated into Bmad (A Relativistic Charged Particle Simulation Library [REF]), is widely used for SR calculations.*
- *In SYNRAD, accelerator is divided into element along the curvilinear coordinates:*
  - *Photons are generated along the length of any element where SR are produced, using standard SR formulas for dipoles, quadrupoles and wigglers.*
  - *The generated photons are tracked to the vacuum chamber wall, horizontally, both inside and outside walls, also divided into elements.*
  - *SR power and photon flux along the walls are calculated.*

REF: D. Sagan (dcs16@cornell.edu), SYNRAD Information (http://www.lepp.cornell.edu/~dcs16/)

SYNRAD Input files

Main Input

```
&synrad_params
  sr_param%lat_file = "lat.bmad"    ! Input lattice.
  sr_param%i_beam = 0.1             ! Single-beam current.
  sr_param%epsilon_y = 10e-12       ! Vertical emittance.
  sr_param%n_slice = 20             ! # of slices per element or wiggler period
  seg_len = 0.1                     ! Segment length for calculation.
  beam_direction = 0                ! -1 = track backwards only,
                                    !  0 = track both directions, 1 = forward.
  wall_file = "wall.dat"            ! "NONE" => Use a wall with a fixed offset from the bear
  wall_offset = 0.045               ! Used when wall_file is set to "NONE"
  forward_beam  = "POSITRON"        ! "POSITRON" or "ELECTRON"
  backward_beam = "ELECTRON"        !  This is important if there are elsep elements.
```

Wall Definition

```
! Note: x_inside should be negative.
! Note: First s_position should be 0.
!
!s_position   x_inside   x_outside
        0       -0.025   0.025
        10      -0.025   0.025
        10.3    -0.025   0.037
        ... etc ...
```

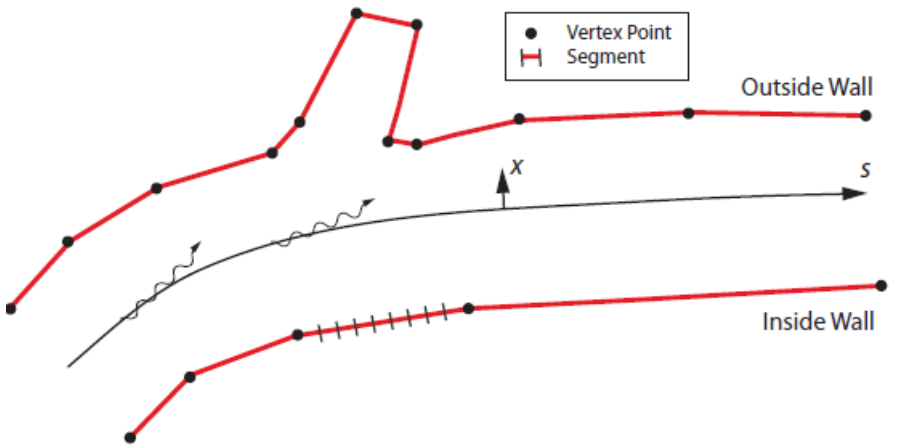

SYNRAD Generated Five Output files

- element_power.dat

  List of all elements where radiation is produced showing the power radiated and the power that hit the walls. These two numbers should be the same.

- synch_power_negative_x_side.dat & synch_power_positive_x_side.dat

  List of all wall segments showing such things as power deposited, power per unit length, photons per second impinging, etc.

- synrad_negative_x_side.txt & synrad_positive_x_side.txt

  Similar to above, only in different format

Example output file

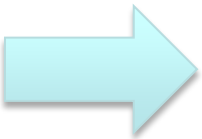

synch_power_Outside.dat

```
Lattice: cerl/trunk/model/lat.bmad
I_beam     =  0.100000001490116        ! Amps/beam
Epsilon_y =  2.999999901276418E-011   ! Vertical emittance

            Segment
 Ix Name            S_seg     X_seg      P/len      P/Area      P_tot      Phot/sec
                     (m)       (m)       (W/m)     (kW/m^2)      (W)        (1/s)
    1 OUTSIDE       0.100     0.030     0.00E+00  0.0000E+00  0.0000E+00  0.0000E+00
    2 OUTSIDE       0.200     0.030     0.00E+00  0.0000E+00  0.0000E+00  0.0000E+00
    3 OUTSIDE       0.300     0.030     0.00E+00  0.0000E+00  0.0000E+00  0.0000E+00
    4 OUTSIDE       0.400     0.030     0.00E+00  0.0000E+00  0.0000E+00  0.0000E+00
    5 OUTSIDE       0.500     0.030     0.00E+00  0.0000E+00  0.0000E+00  0.0000E+00

 4124 OUTSIDE     412.386     0.030     0.00E+00  0.0000E+00  0.0000E+00  0.0000E+00
 4125 OUTSIDE     412.486     0.030     0.00E+00  0.0000E+00  0.0000E+00  0.0000E+00
 4126 OUTSIDE     412.586     0.030     0.94E+02  0.2907E+04  0.9418E+01  0.1116E+18
 4127 OUTSIDE     412.686     0.030     0.13E+03  0.4255E+04  0.1336E+02  0.1583E+18
 4128 OUTSIDE     412.786     0.030     0.13E+03  0.4181E+04  0.1331E+02  0.1577E+18
 4129 OUTSIDE     412.886     0.030     0.13E+03  0.4132E+04  0.1336E+02  0.1583E+18
 4130 OUTSIDE     412.986     0.030     0.13E+03  0.4058E+04  0.1331E+02  0.1577E+18

 22889 OUTSIDE    2288.823     0.030     0.00E+00  0.0000E+00  0.0000E+00  0.0000E+00
 22890 OUTSIDE    2288.923     0.030     0.00E+00  0.0000E+00  0.0000E+00  0.0000E+00
 22891 OUTSIDE    2289.023     0.030     0.00E+00  0.0000E+00  0.0000E+00  0.0000E+00
 22892 OUTSIDE    2289.123     0.030     0.00E+00  0.0000E+00  0.0000E+00  0.0000E+00
 22893 OUTSIDE    2289.223     0.030     0.00E+00  0.0000E+00  0.0000E+00  0.0000E+00
 22894 OUTSIDE    2289.323     0.030     0.00E+00  0.0000E+00  0.0000E+00  0.0000E+00
 22895 OUTSIDE    2289.423     0.030     0.00E+00  0.0000E+00  0.0000E+00  0.0000E+00
 22896 OUTSIDE    2289.523     0.030     0.00E+00  0.0000E+00  0.0000E+00  0.0000E+00
 22897 OUTSIDE    2289.623     0.030     0.00E+00  0.0000E+00  0.0000E+00  0.0000E+00
 22898 OUTSIDE    2289.723     0.030     0.00E+00  0.0000E+00  0.0000E+00  0.0000E+00
```

SYNRAD Results – CesrTA Modification Example

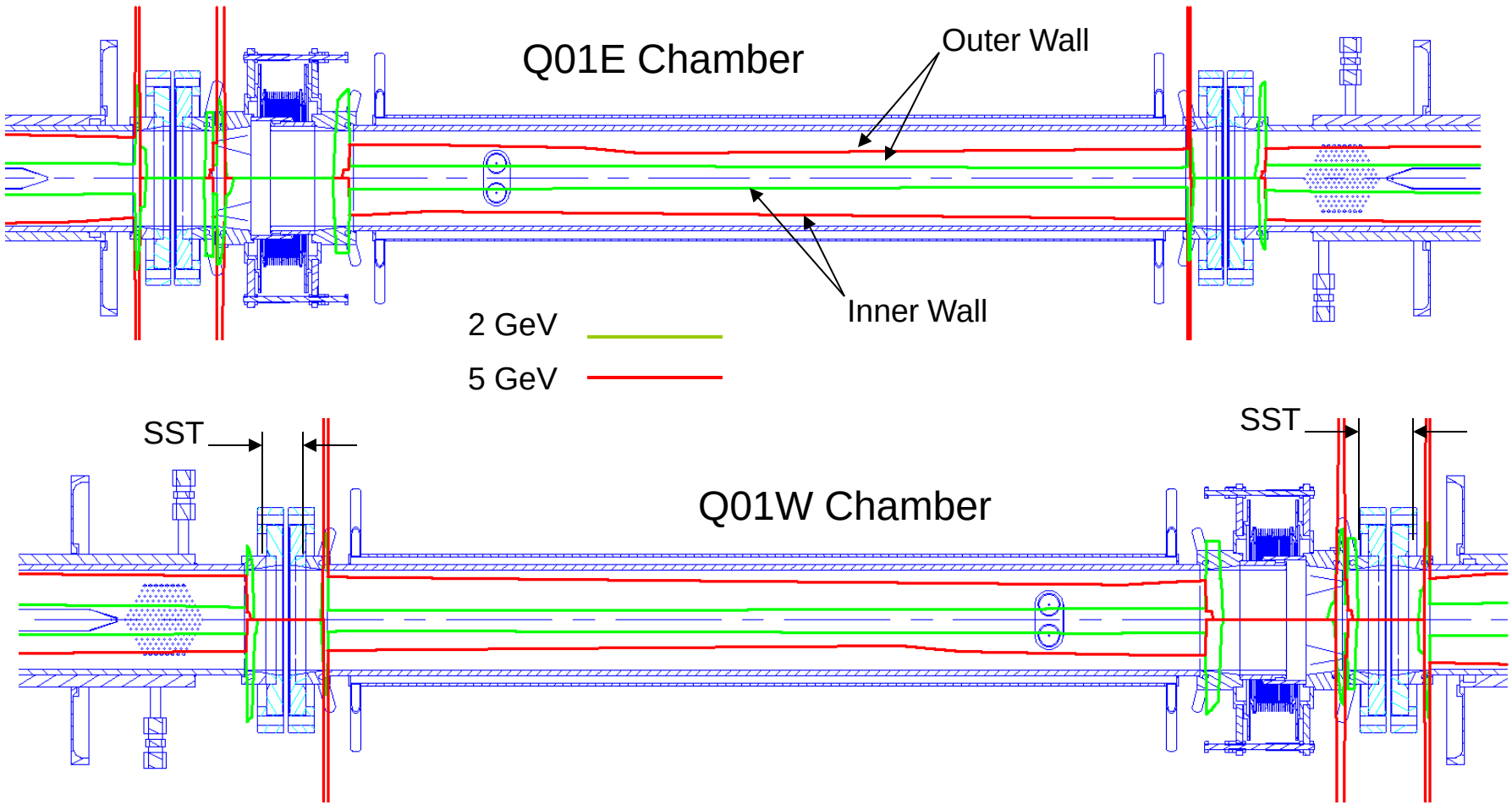

SYNRAD used to ensure proper SR Masks were designed to shadow non-cooled components

Thermal Stress Analysis – Example

- During CesrTA vacuum system conversion, a photon stopper chamber had to be designed to handle 40 kW of SR power generated from a string of six superconducting wigglers.
- ANSYS was used to calculate temperature rises and stress, at maximum power density of 6 W/mm^2, to verify safe operation of the chamber.

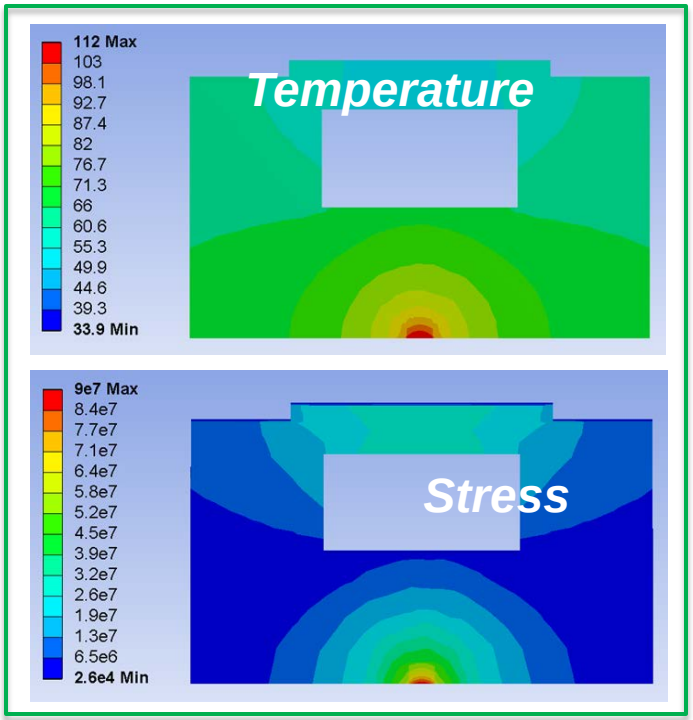

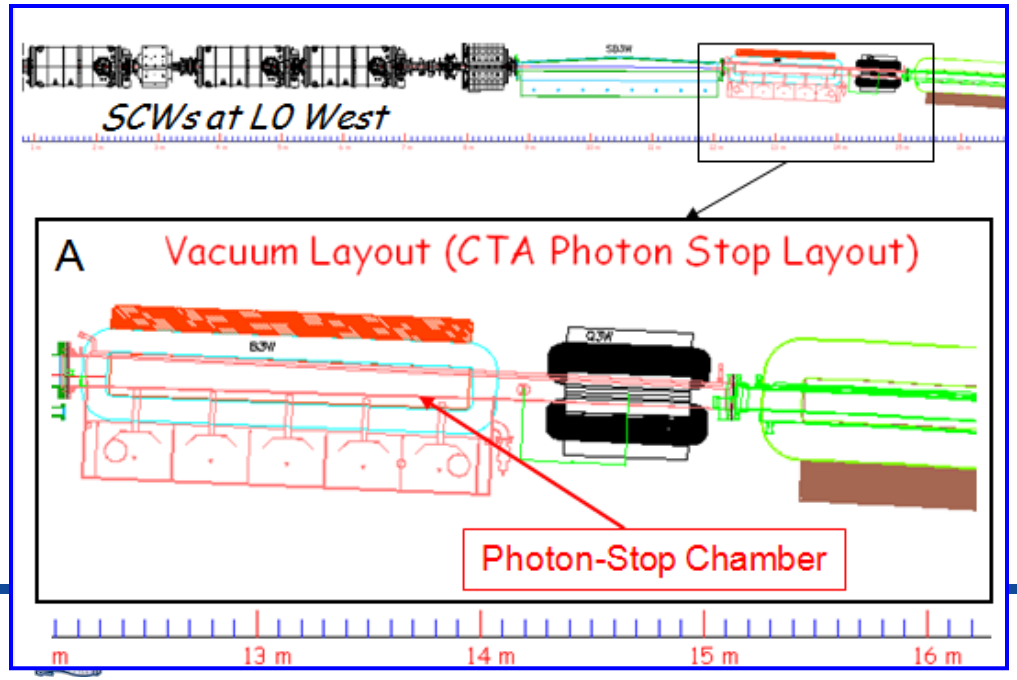

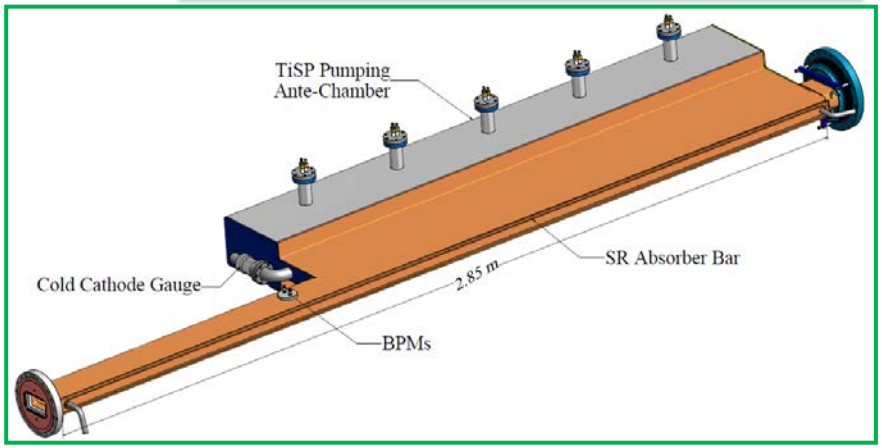

Synchrotron Radiation Calculations – SYNRAD 3D

- At glazing angles, high energy photons have very high reflectivity on matters.
- Recently, a 3D version of SYNRAD was developed to track SR photons in a 3D structure by David Sagan (*http://www.lns.cornell.edu/~dcs/*) at Cornell. The SYNRAD 3D takes into account of elastic reflection of SR photons (both specular and diffusive) with user specified reflectivity and surface roughness.
- SYNRAD 3D generates SR photons distributions that linked to the accelerator lattice, as SYNRAD.
- The chamber geometry is defined by series of (changing) cross sections along beam path, and SYNRAD 3D generates smooth transitions between sections.

- A functionally similar SYNRAD program (*http://test-molflow.web.cern.ch*) is also available from CERN.
- This SYNRAD is developed by R. Keservan at CERN. It can directly import 3D geometry of a vacuum system from a CAD model. But it requires manual setup of magnetic 'regions'.
- The CERN SYNRAD can be coupled with a vacuum modelling program (MolFlow+) for pressure profile simulations in a complex system.

Electron Beam Dump – Another Example

- *In Cornell's ERL prototype inject project, an 600-kW electron dump was designed and constructed.*
- *Aluminum (6062-T6) was chosen over copper due to its higher neutron generation threshold.*
- *A pair of quads used to enlarge the beam sized, and a modified Sectupole used to raster centroid of the beam.*
- *Cooling water channeled through small channels to enhance heat exchange.*

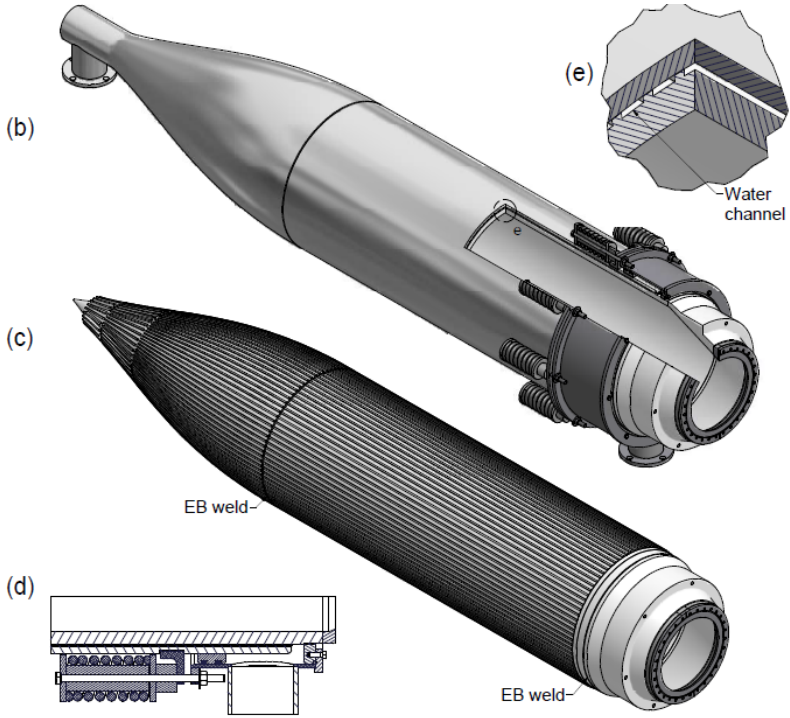

REF.: X. Liu et al. / Nuclear Instruments and Methods in Physics Research A 709 (**2013**) 37-43

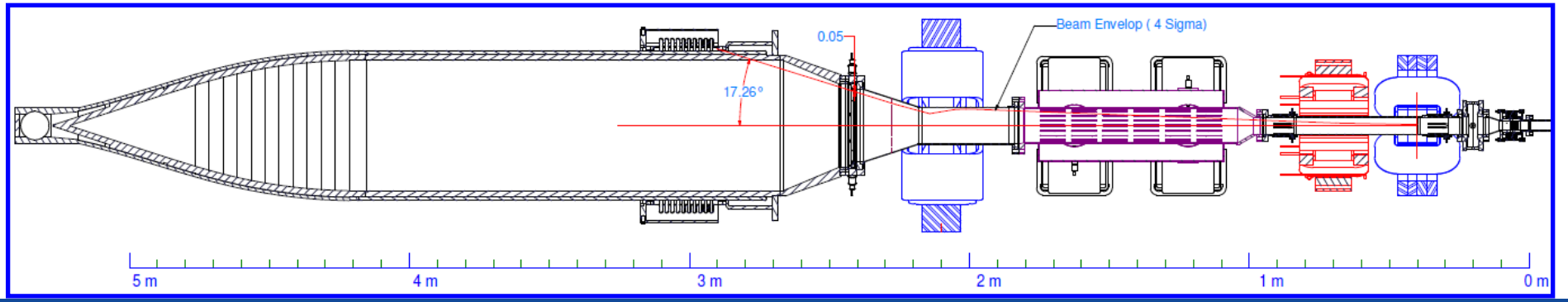

Simulate & optimize power deposition

- Geant4 (a toolkit for the simulation of the passage of particles through matter) was used to simulate electron beam interaction with dump body, and to optimize beam setup for even power deposition

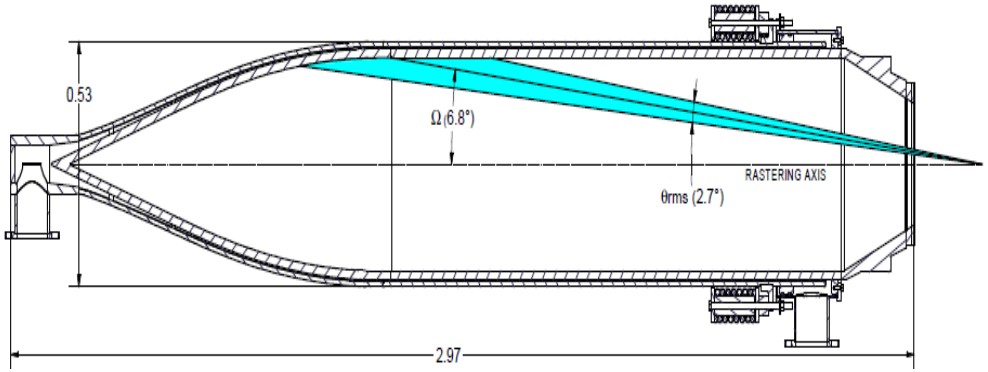

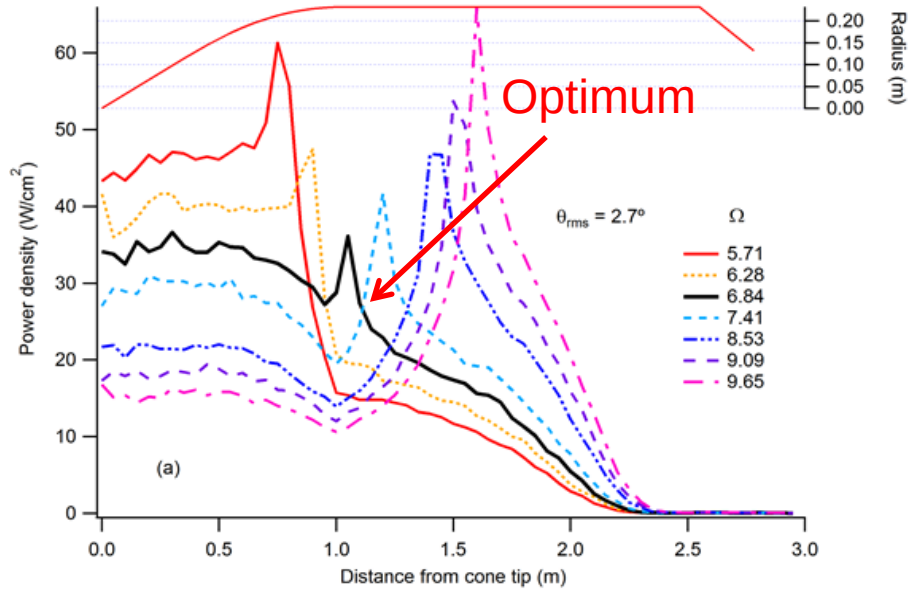

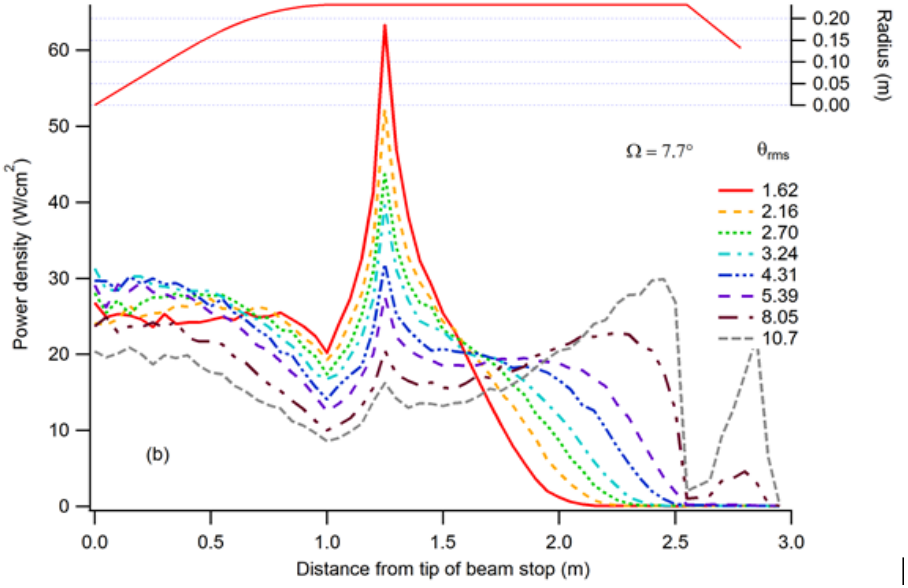

Dump Thermal Analysis

- *After optimizing electron beam setting, ANSYS was used to calculate temperature distribution and analysis thermal stress, to ensure operational safety at design power level.*
- *Taking symmetry advantage, only one slice (16.4°) of the dump body needs to be modeled, to save computing time.*

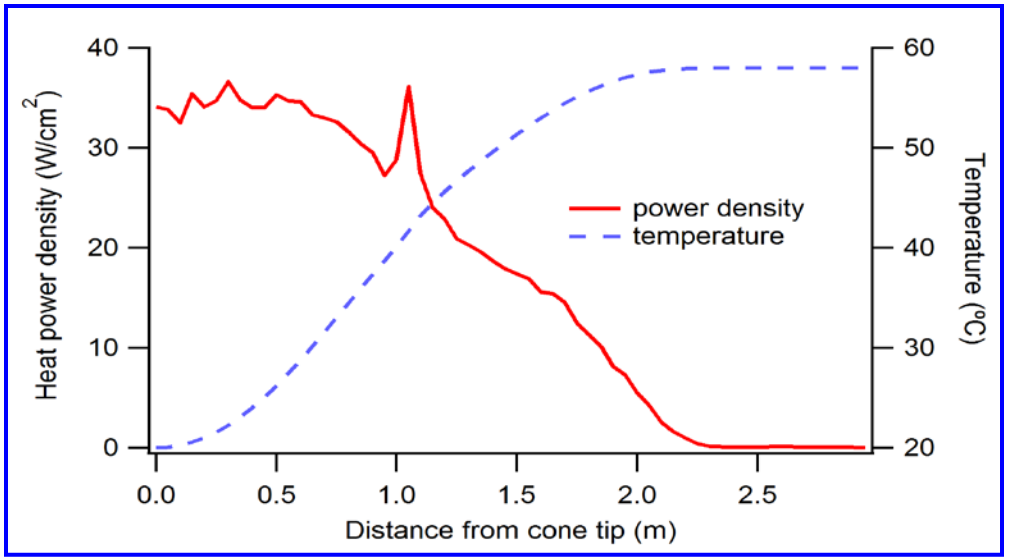

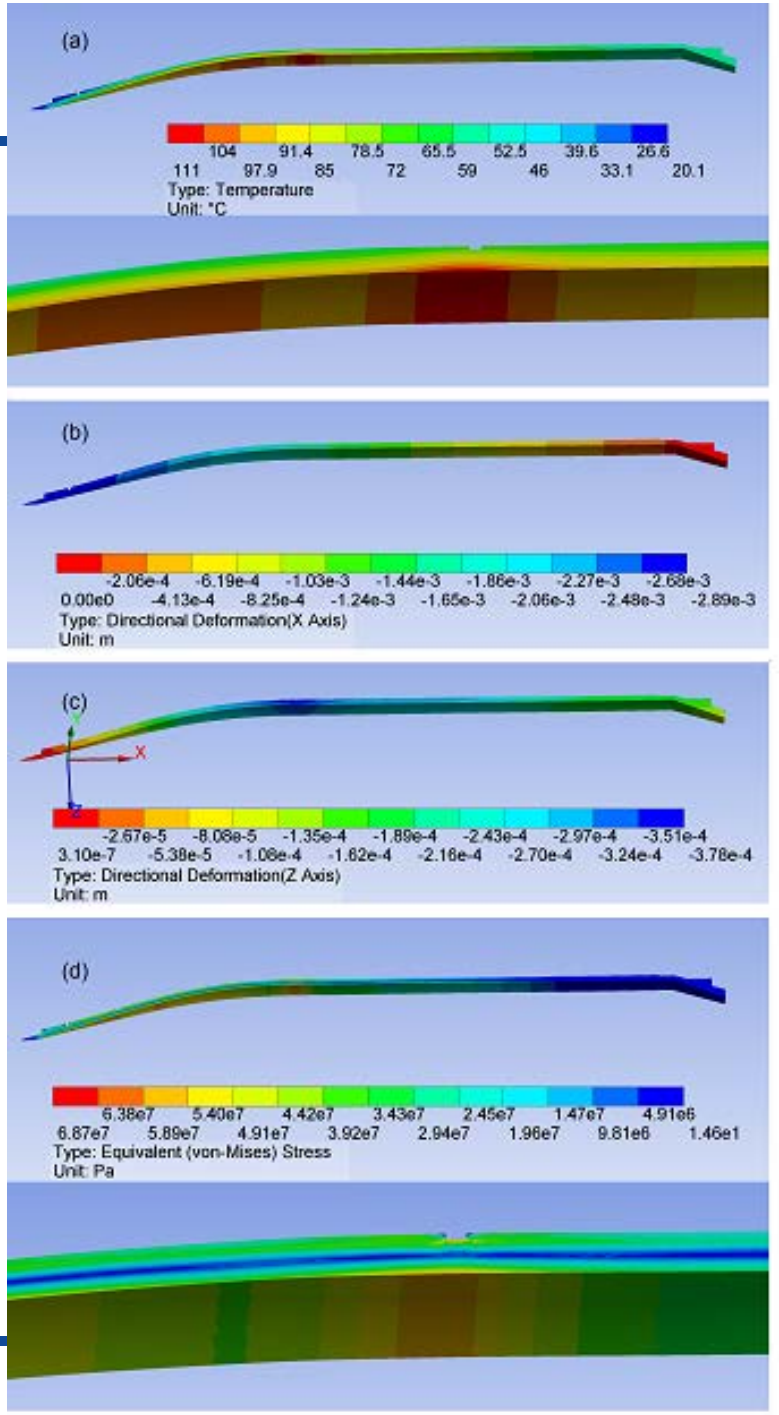

Pressure Profile Calculations/Simulations

- *In accelerator vacuum system design, or/and in accelerator operations, knowledge of vacuum pressure distribution (or profile) is often needed for the following reasons:*

  → Optimizing pumping speed and capacity installed to keep average pressure and peak pressure under desirable level

  → Understand impact of regional conductance limitation and local high gas load to the accelerator operations (such as beam lifetime, background to HEP detector, X-ray users)

- *For almost all accelerator vacuum systems, molecular flow condition prevail.*

- *Though analytical method may work for very simple systems (such as round tubes), numerical approaches are usually used in simulating the pressure profile, with defined geometry, known pumping and calculated gas loads.*

One-Dimensional Pressure Profiles

- *Since most accelerators and components have one dimension which is much bigger than the two others (length of the beamlines vs. cross-section of the beampipe), one-dimensional mass-balance equation may be used:*

$$V\frac{dP(x,t)}{dt} = Q(x,t) - S(x,t)\cdot P(x,t) + c(x,t)\cdot\frac{d^2P(x,t)}{dx^2}$$

- *At static states (which apply to most accelerator operation condition, where beam current varies slowly):*

$$S(x)\cdot P(x) - c(x)\cdot\frac{d^2P(x)}{dx^2} = Q(x)$$

where S(x), Q(x) are pumping speed and gas load, c(x) is specific gas conductance

- *In the literature, it is solutions to this equation that are found most often. Some of them are obtained analytically, others numerically.*

Analytical Solution – Periodic System

- *Consider a simple vacuum system of uniform cross section, with lumped pumps installed every L meters apart, no distributed pumping.*
- *Let A be the specific surface of the vacuum chamber, in cm^2/m , and an uniform thermal outgassing rate, q in $mbar \cdot l/s \cdot cm^2$, we have*

$$c\frac{d^2P(x)}{dx^2} = -Aq$$

and by symmetry:

$$\begin{cases} \frac{dP}{dx}(x = L/2) = 0 \\ P(x = 0) = AqL/S \end{cases}$$

- *The solution is:*

$$P(x) = \frac{Aq}{2c}\left(Lx - x^2\right) + \frac{AqL}{S}$$

Analytical Solution – Periodic System Cont.

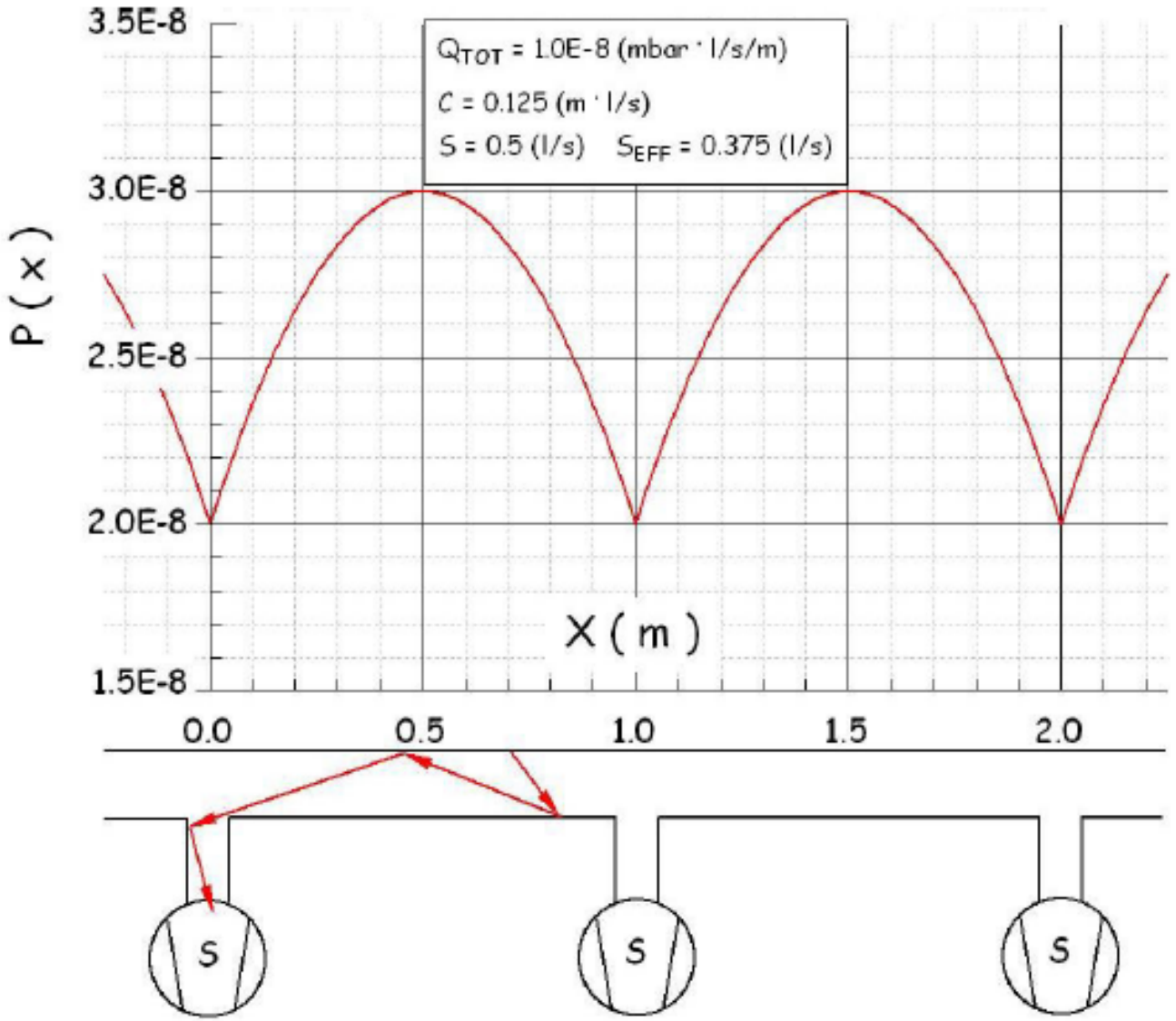

Analytical Solution – Periodic System Cont.

Average and maximum pressures are:

$$P_{avg} = AqL\left(\frac{L}{12c}+\frac{1}{S}\right) \equiv AqL\cdot\frac{1}{S_{eff}} \quad \& \quad P_{peak} = AqL\left(\frac{L}{8c}+\frac{1}{S}\right)$$

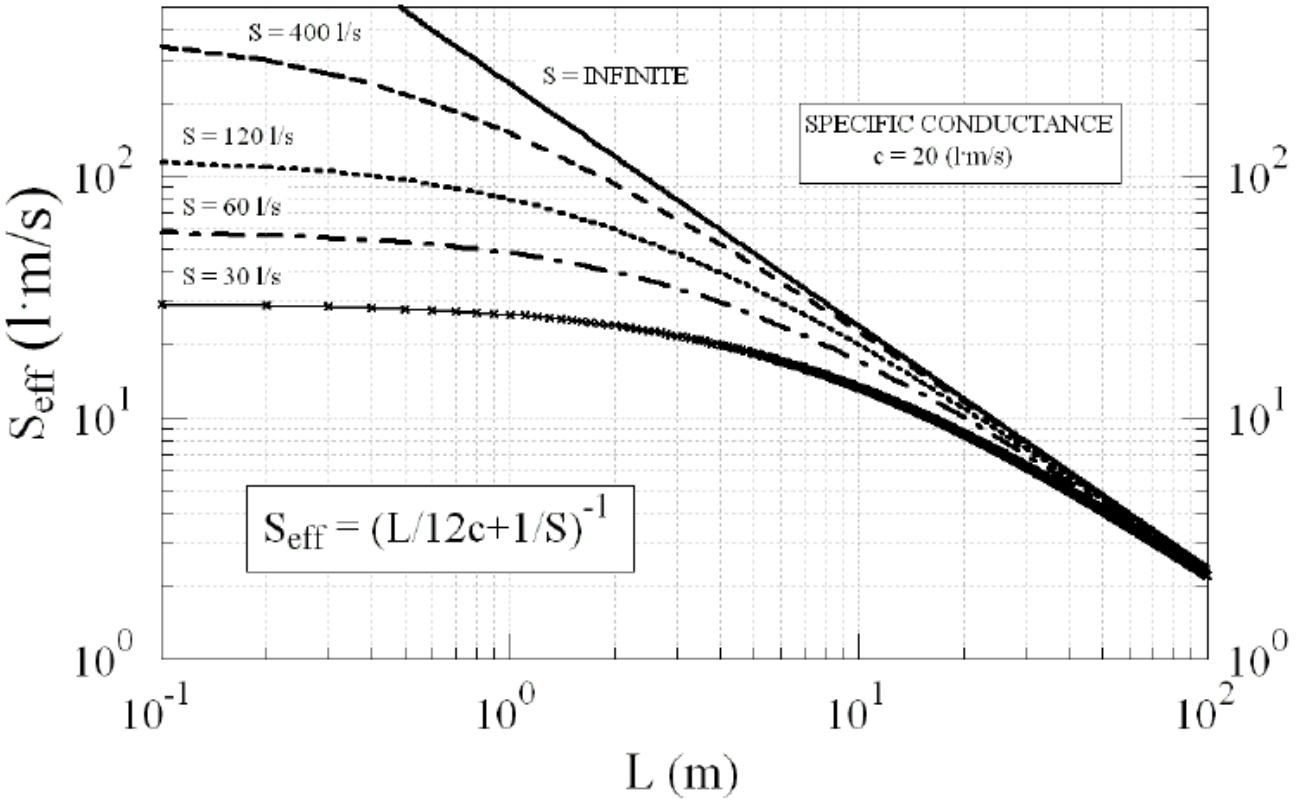

VACCALC: A Numerical Implementation

This solving technique is based on the finite-difference method, by 'slicing' vacuum system into N elements of equal length, Δx

$$S(x)\cdot P(x) - c(x)\cdot \frac{d^2P(x)}{dx^2} = Q(x) \quad \Rightarrow \quad \frac{d}{dx}\left(c_i \frac{dP_i}{dx}\right) - S_i \cdot P_i + Q_i = 0$$

AND:

$$\frac{d}{dx}\left(c_i \frac{dP}{dx}\right) = \frac{(c_{i+1} - c_i)P_{i+1} + (c_i - c_{i-1})P_{i-1}}{2\Delta x^2} - \frac{(c_{i+1} - c_{i-1} + 2c_i)P_i}{2\Delta x^2}$$

$$\frac{c_i + c_{i-1}}{2} P_{i-1} + \left\{ \frac{-(c_{i+1} + c_{i-1} + 2c_i)}{2} - s_i \Delta x^2 \right\} P_i + \frac{c_{i+1} + c_{i+1}}{2} P_{i+1} = q_i \Delta x^2$$

With proper boundary conditions, these linear equations can be solved for the pressure profile, P_i.

Ref. "A Method for Calculating Pressure Profiles in Vacuum Pipes", Sullivan, SLAC, 1993

VACCALC Input

- Each beampipe element is described by the following characteristics:
  - Lumped or distributed values.
  - Length (m)
  - Axial conductance (liters/sec)
  - Outgassing rate (nTorr-liters/sec)
  - Pumping speed (liters/sec)
- Segment length (Δx) is specified for all elements
- 10,000 segments max. per pipe

VACCALC Output

- VACCALC produces an Excel Spreadsheet output file called "VACCALC.tsv" which includes the following:

1. Pressure (nTorr) vs. Z (meters)
2. Average Pressure along piping segment (nTorr)
3. Axial Conductance (liters/sec-m) vs. Z (meters)
4. Gas load (nTorr-liters/sec-m) vs. Z (meters)
5. Pumping Speed (liters/sec-m) vs. Z (meters)

Example: K. Gounder, et al, "RESIDUAL GAS PRESSURE PROFILE IN THE RECYCLER RING", *Proceedings of the 2003 Particle Accelerator Conference*

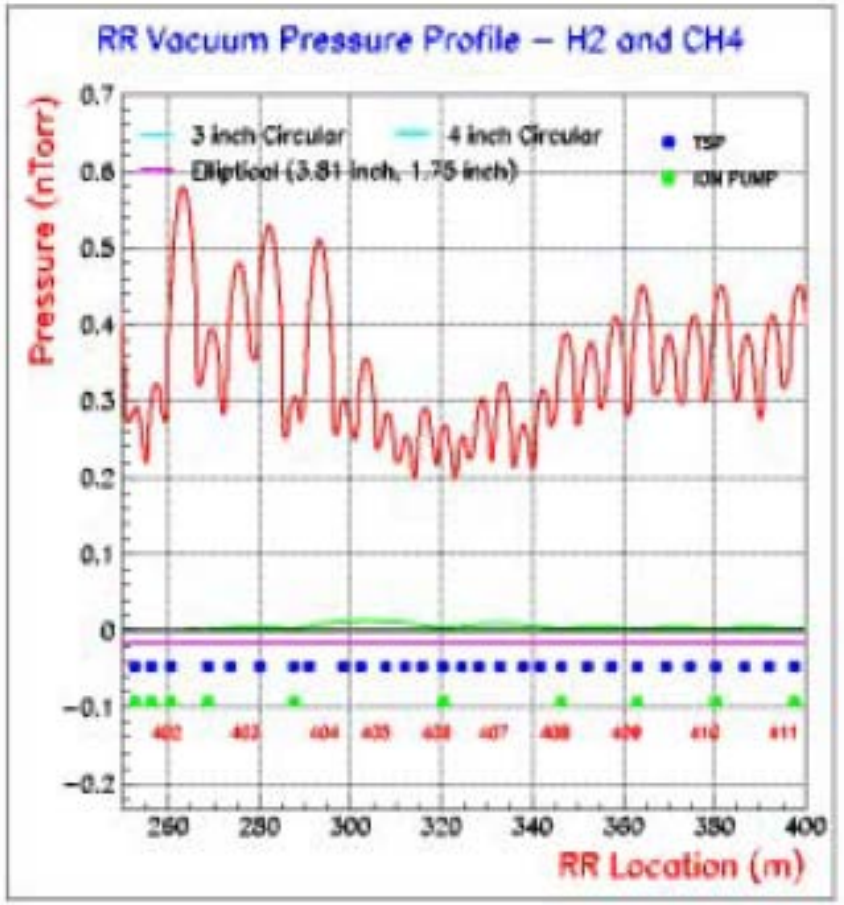

The Continuity Principle of Gas Flow

- Another way of solving the mass-flow balance equation is the so-called Continuity Principle of Gas Flow*, which can be stated after discretization of the vacuum system as shown.

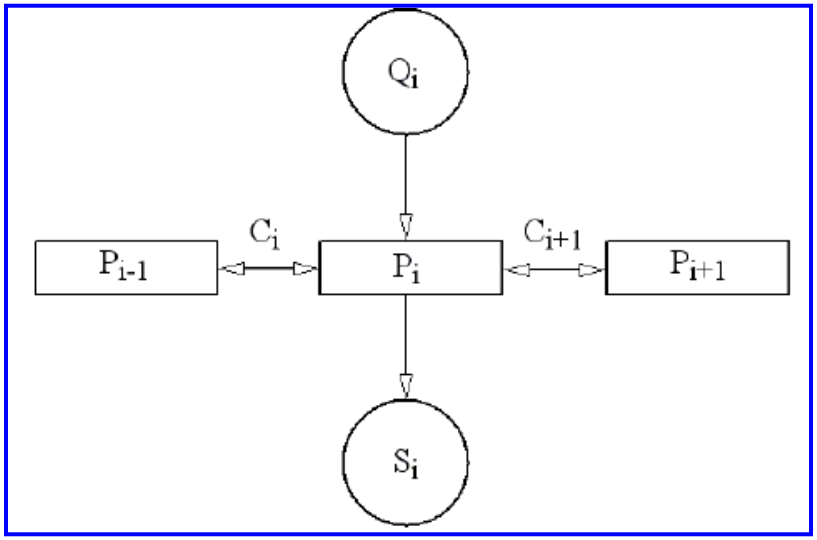

- Each segment of the vacuum system is assigned its Si, Qi and Ci, and then its pressure Pi is obtained by solving the set of equations:

$$C_i(P_{i-1}-P_i)+C_{i+1}(P_{i+1}-P_i)+Q_i = S_iP_i$$

- Three boundary conditions (BCs) were discussed in the reference(*):

1) Periodic BC; (2) Smooth BC; (3) Fixed BC

* Y. Li *et al*., Calculation of pressure profiles in the CESR hardbend and IR regions, Proc. Int. Workshop on Performance and Improvement of e–e+ Collider Particle Factories, Tsukuba, p.242-247 (1999)

The Continuity Principle of Gas Flow Cont.

Periodic BC:

$$\begin{cases} P_0 = P_n \\ P_{n+1} = P_0 \end{cases} \quad \text{then} \quad \begin{cases} C_1(P_n - P_1) + C_2(P_2 - P_1) + Q_1 = S_1 P_1 \\ C_i(P_{i-1} - P_i) + C_{i+1}(P_{i+1} - P_i) + Q_i = S_i P_i \\ C_n(P_{n-1} - P_n) + C_1(P_1 - P_n) + Q_n = S_n P_n \end{cases}$$

Smooth BC:

$$\begin{cases} P_0 = P_1 \\ P_{n+1} = P_n \end{cases} \quad \text{then} \quad \begin{cases} C_2(P_2 - P_1) + Q_1 = S_1 P_1 \\ C_i(P_{i-1} - P_i) + C_{i+1}(P_{i+1} - P_i) + Q_i = S_i P_i \\ C_n(P_{n-1} - P_n) + Q_n = S_n P_n \end{cases}$$

Fixed BC:

$$\begin{cases} P_0 = known \\ P_{n+1} = known \end{cases} \quad \text{then} \quad \begin{cases} -C_1 P_1 + C_2(P_2 - P_1) + (Q_1 + C_1 P_0) = S_1 P_1 \\ C_i(P_{i-1} - P_i) + C_{i+1}(P_{i+1} - P_i) + Q_i = S_i P_i \\ C_n(P_{n-1} - P_n) - C_1 P_n + (C_{n+1} P_{n+1} + Q_n) = S_n P_n \end{cases}$$

All these linear equations can be easily solved to obtain pressure profile, via so-called Substitute-Forward & Chase-Backward method, as described in the reference.

Arithmetic for Smooth BC

Continuity Principle of Gas Flow equations can be rewrite as:

$$a_i P_{i-1} + P_i + b_i P_{i+1} = d_i \qquad (i = 1,2,\ldots,n) \qquad \textbf{(A)}$$

$$\begin{cases} a_i = -C_i/(C_i + C_{i+1} + S_i) \\ b_i = -C_{i+1}/(C_i + C_{i+1} + S_i) \\ d_i = Q_i/(C_i + C_{i+1} + S_i) \end{cases} \quad \begin{cases} a_1 = 0 \\ b_1 = -C_2/(C_2 + S_1) \\ d_1 = Q_1/(C_2 + S_1) \end{cases} \quad \begin{cases} a_n = -C_n/(C_n + S_n) \\ b_n = 0 \\ d_n = Q_n/(C_n + S_n) \end{cases}$$

Forward- Substitute *(solving for P_i in **i**th equation in equations (A) and then substituting solved P_i into **(i+1)**th equation in equations (A), an so forth, from **i**=1 to **i**=n)*

$$\begin{cases} P_i = d_i^* - b_i^* P_{i+1} & (i = 1,2,\ldots,n-1) \\ P_n = d_n^* & \textbf{(B)} \end{cases}$$

$$\begin{cases} b_1^* = b_1 \\ d_1^* = d_1 \end{cases} \quad \& \quad \begin{cases} b_i^* = b_i/(1 - a_i b_{i-1}^*) \\ d_i^* = (d_i - a_i d_{i-1}^*)/(1 - a_i b_{i-1}^*) \end{cases} \quad (i = 2,3,\ldots,n-1) \quad \& \quad d_n^* = (d_n - a_n d_{n-1}^*)/(1 - a_n b_{n-1})$$

The pressure profile is now easily obtained by 'chase-back' of equation (B)

Implementation in IGOR Pro. (ICM Prototype Beamline Pressure Profile)

Application – Background of HEP Detector

In CESR/CLEO HEP II operations, an experiment was conducted to probe the HEP detector background sensitivity to pressure distribution

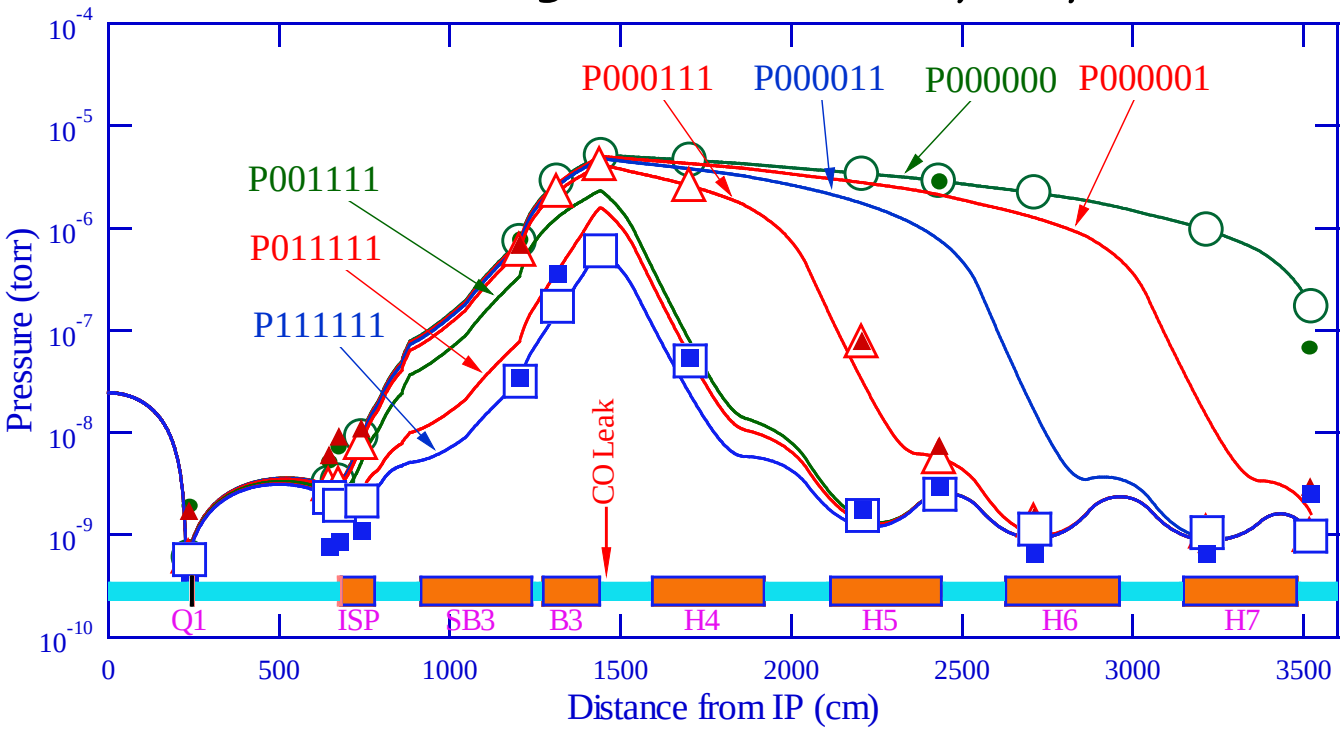

Pxxxxxx

"x" FOR 6 PUMPS

x=0 PUMP OFF

x=1 PUMP ON

SYMBOLS: MEASURED PRESSURES

- *In the experiment, a CO gas was introduced to create a 'pressure bump", and ion pumps (2 LPs, 4 DIPs) were turned off sequentially to spread the bump. A probe electron beam was sent through the bump to measure detector background.*
- *Pressure profiles were calculated and compared to the measured pressures, with ion pump speed's pressure dependence taking into account.*
- *The results helped design of background masks for the CESR/CLEO III upgrade.*

Application – Background of HEP Detector 2

* Gas load Q -- dominated by the CO leak, 1.6×10^{-5} *torr·liter/s*

* Conductance -- calculated using MOLFLOW

* Pumping Speed

  TiSPs -- $S_{max} \bullet F_{sat}$; S_{max}-Plenum Conductance, F_{sat} - Saturation factor

  DIPs -- $S_{max} \bullet f(P)$, Pressure dependent pumping speed

* Self-consistent iteration

Table 3. DIP Pumping Speed Parameters

DIP Name	Max. Pumping Speed, *l/s/m*
B3E	55
H4E	85
H5E	100
H6E	120
H7E	120

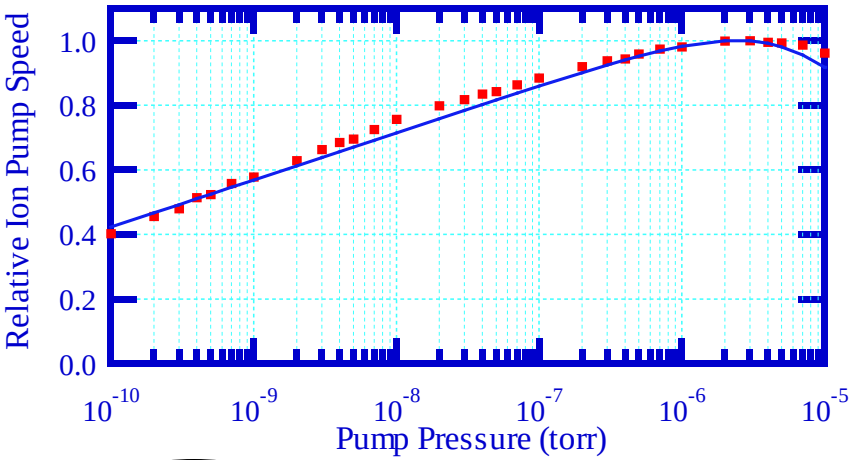

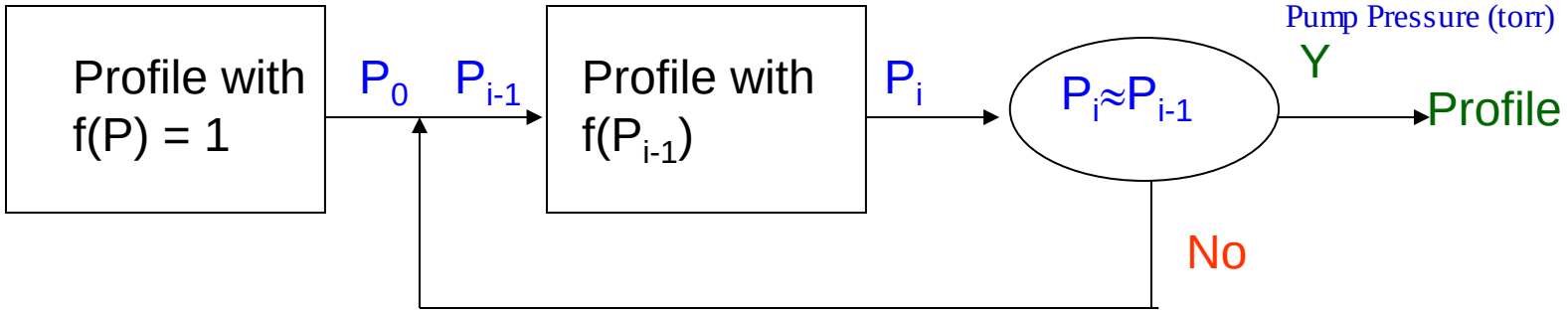

Pressure Manipulations and Calculations

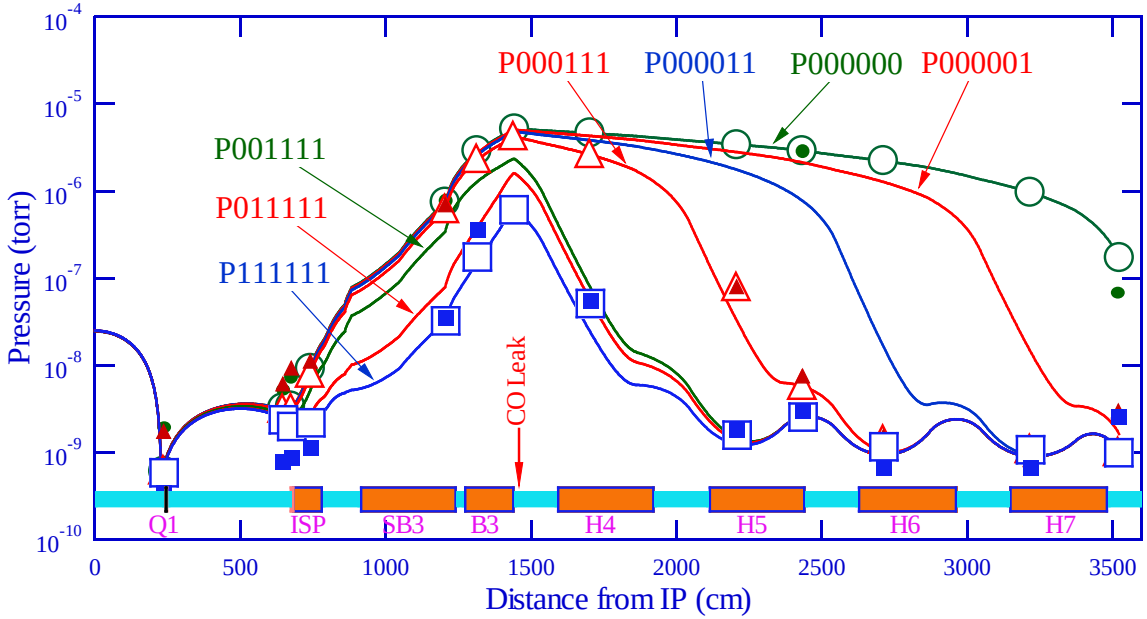

This was a surprise

'Pin-out' sources of gas-induced detector radiation

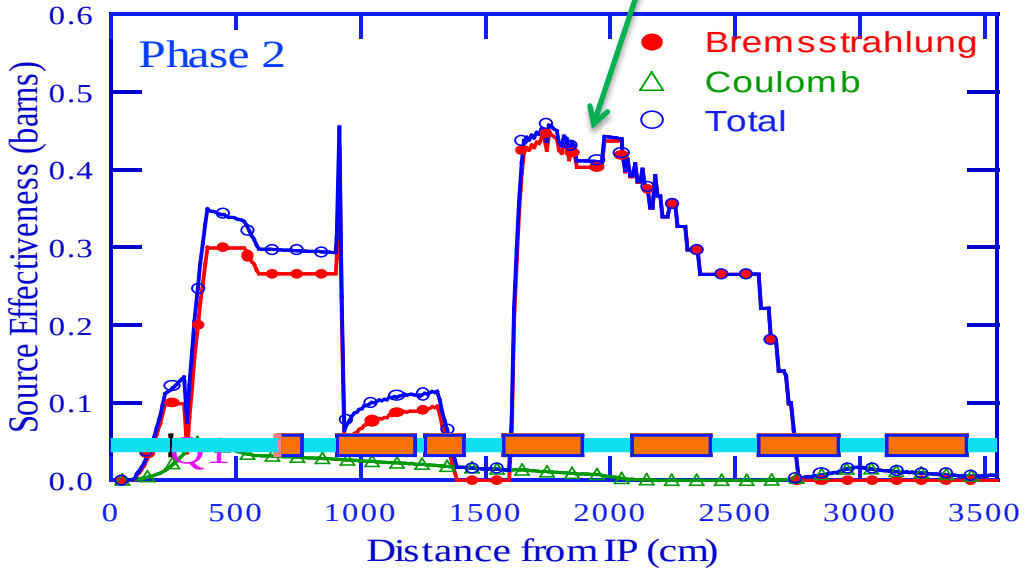

Application – Cornell ERL Vacuum Design

- *In conceptual design of Cornell ERL-based light sources, pressure profile calculations were carried out to ensure adequate vacuum pumping (Ion pumps and NEG strips.).*
- *SYNRAD provided SR flux for 100 mA electron beam at 5 GeV.*
- *Thermal outgassing and SR-induced gas-load (SR yield of 10^{-6} mol/ph) included in calculation.*

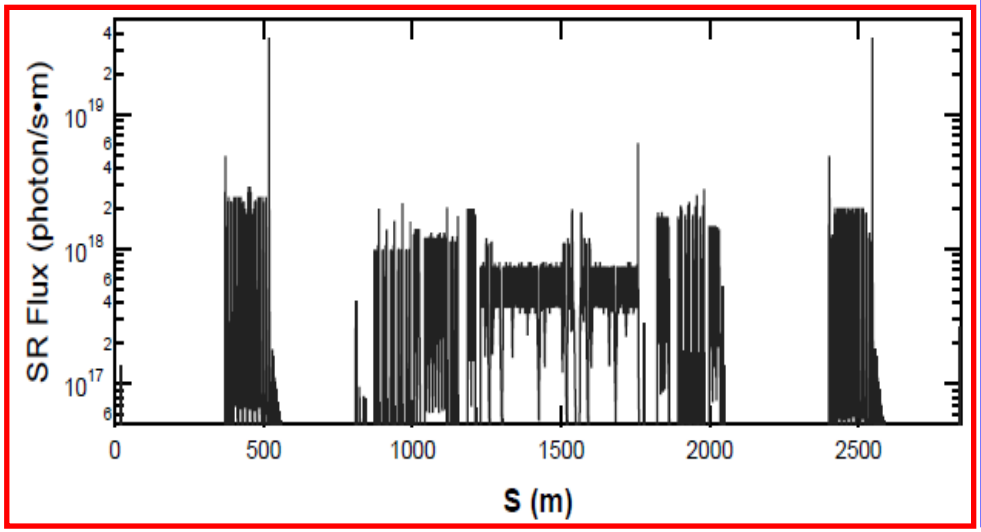

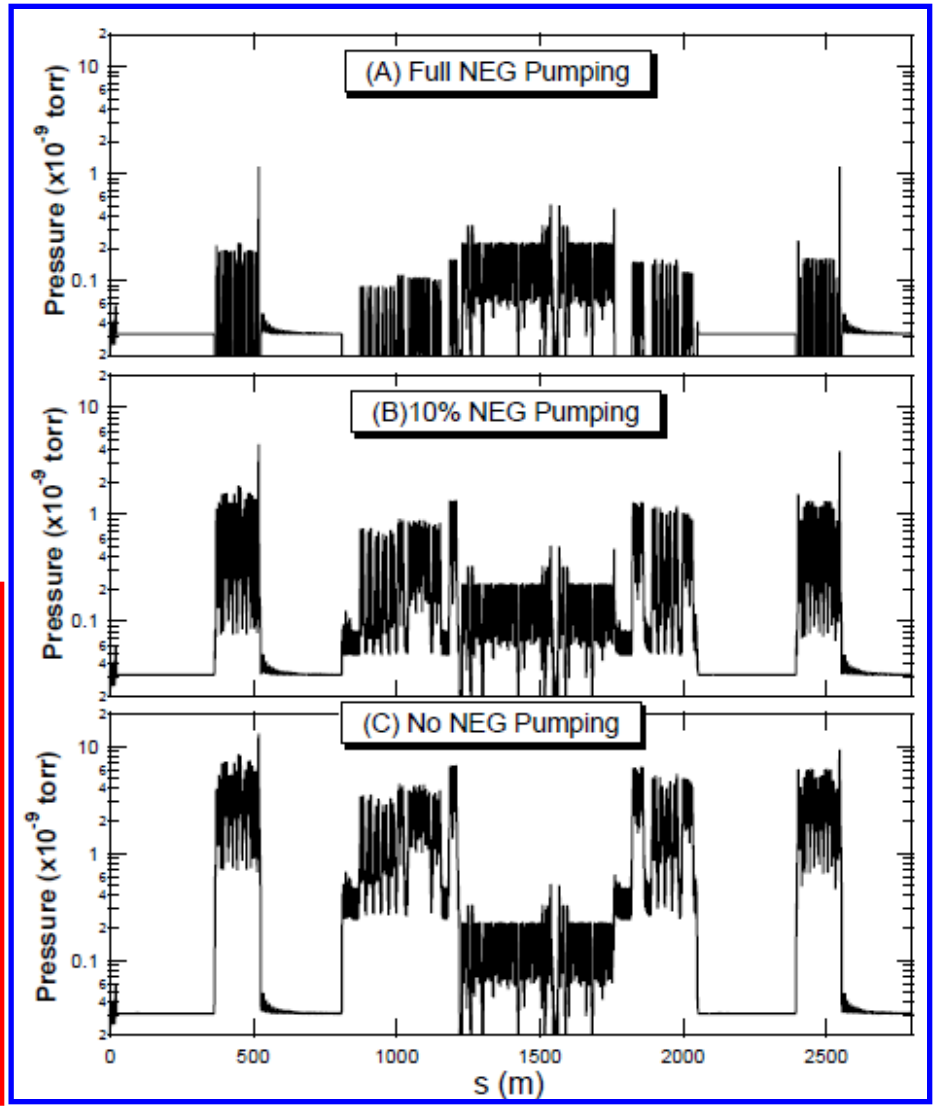

Electric Circuit Analogies

Flow of Gas Molecules ⟷ **Flow of Electrons**

Vacuum		Electric
$\frac{dQ_{molecules}}{dt} = \dot{q} = C \bullet P$	⟷	$\frac{dQ_{electric}}{dt} = I = G \bullet V$
$\dot{q} = V \frac{dP}{dt}$	⟷	$I = C \frac{dV}{dt}$
Pressure P [Torr]	⟷	Potential V [V]
Conductance C [l s^{-1}]	⟷	Conductivity G [Ω^{-1}]
Throughput q [Torr l s^{-1}]	⟷	Current I [A]
Volume V [l]	⟷	Capacitance C [F]

Electric Circuit Analogies – Example 1

Flow of Gas Molecules ⟷ **Flow of Electrons**

vacuum

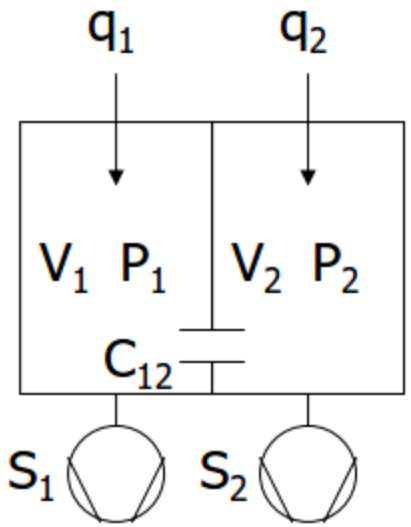

electric

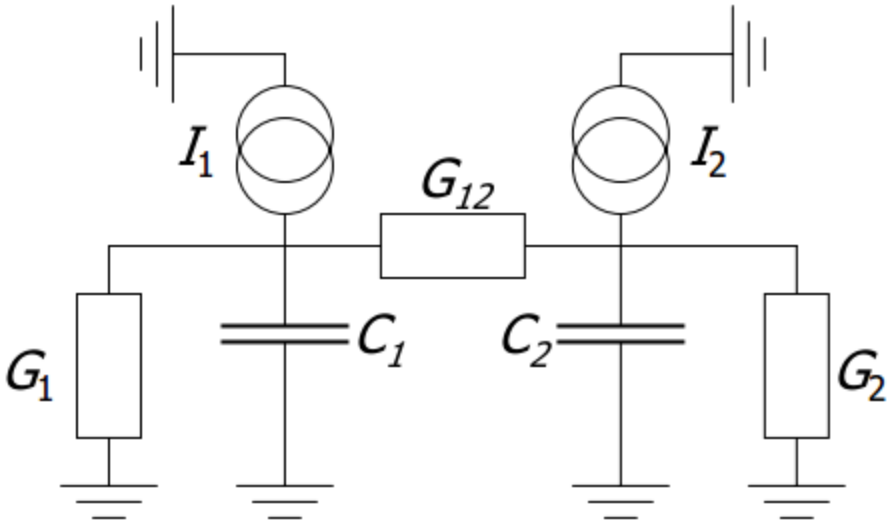

Pressure p [Torr]	*Potential V* [V]
Volume [l]	*Capacitance* [F]
Conductance [l s^{-1}]	*Conductivity* [Ω^{-1}]
Gas flow [Torr l s^{-1}]	*Current* [A]

Electric Circuit Analogies – Example 2

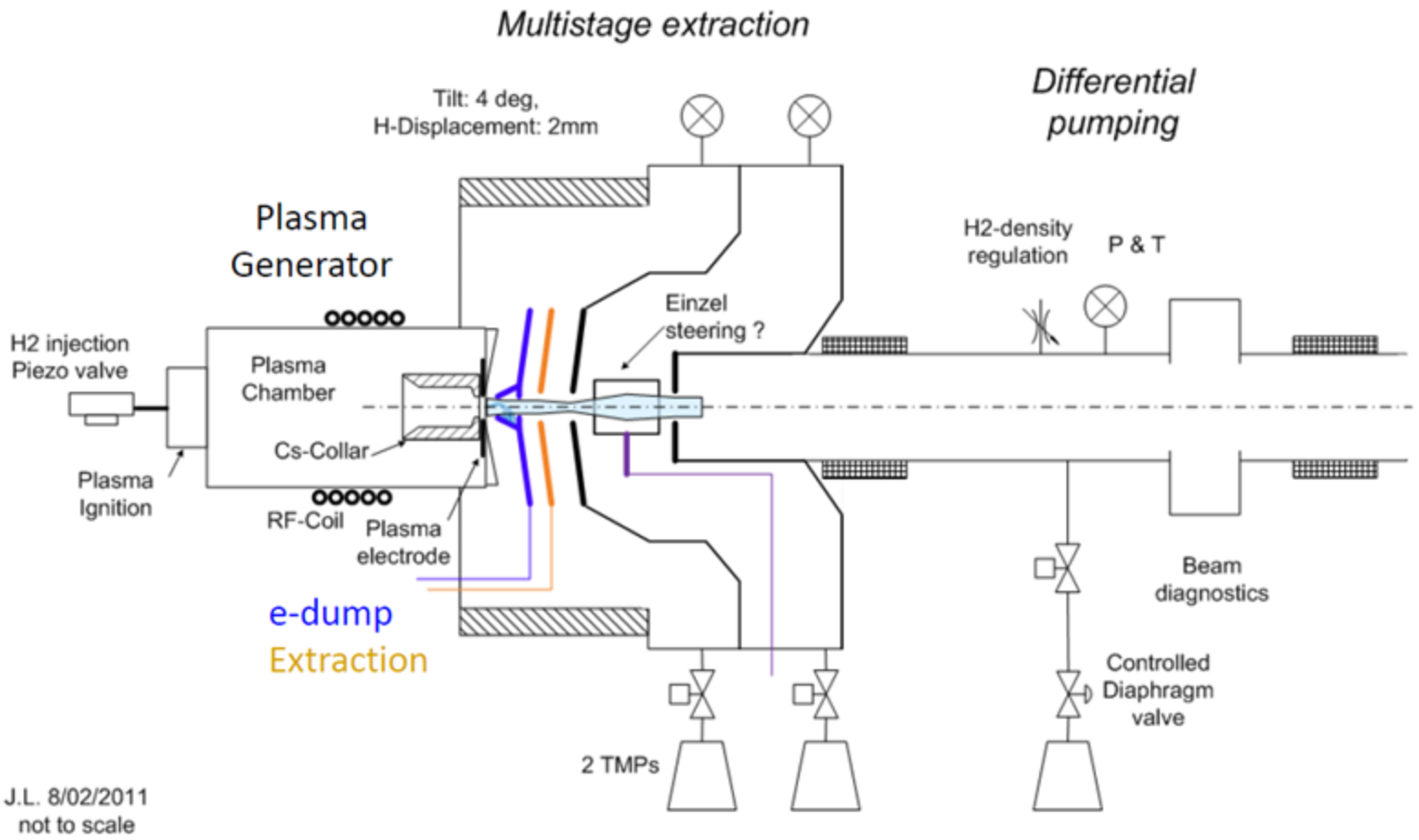

CERN's LINAC-4 Ion Source

Paolo Chiggiato, Chiara Pasquino, Giovanna Vandoni

Electric Circuit Analogies – Example 2

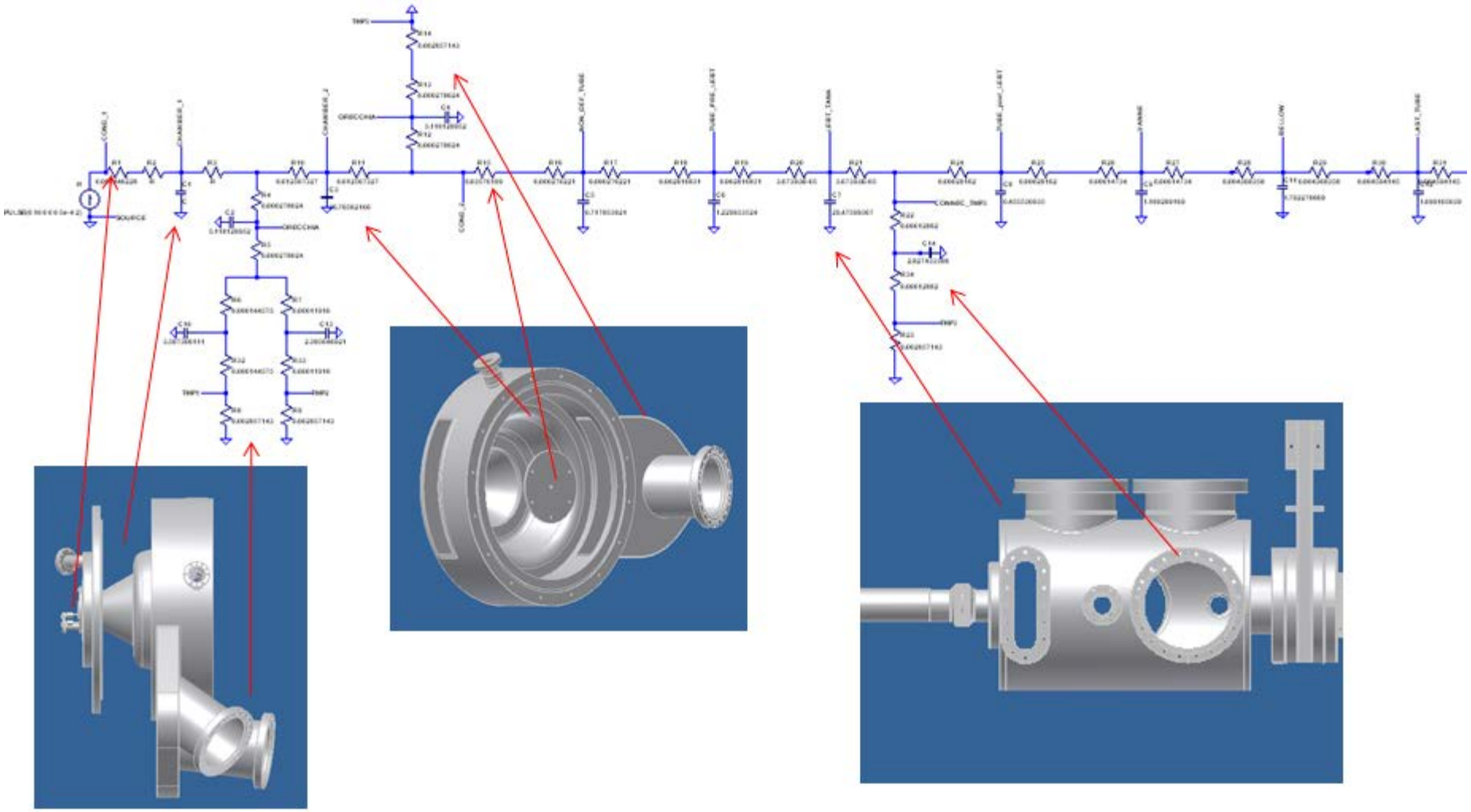

Conductances of each components are calculated by MolFlow+

Electric Circuit Analogies – Example 2

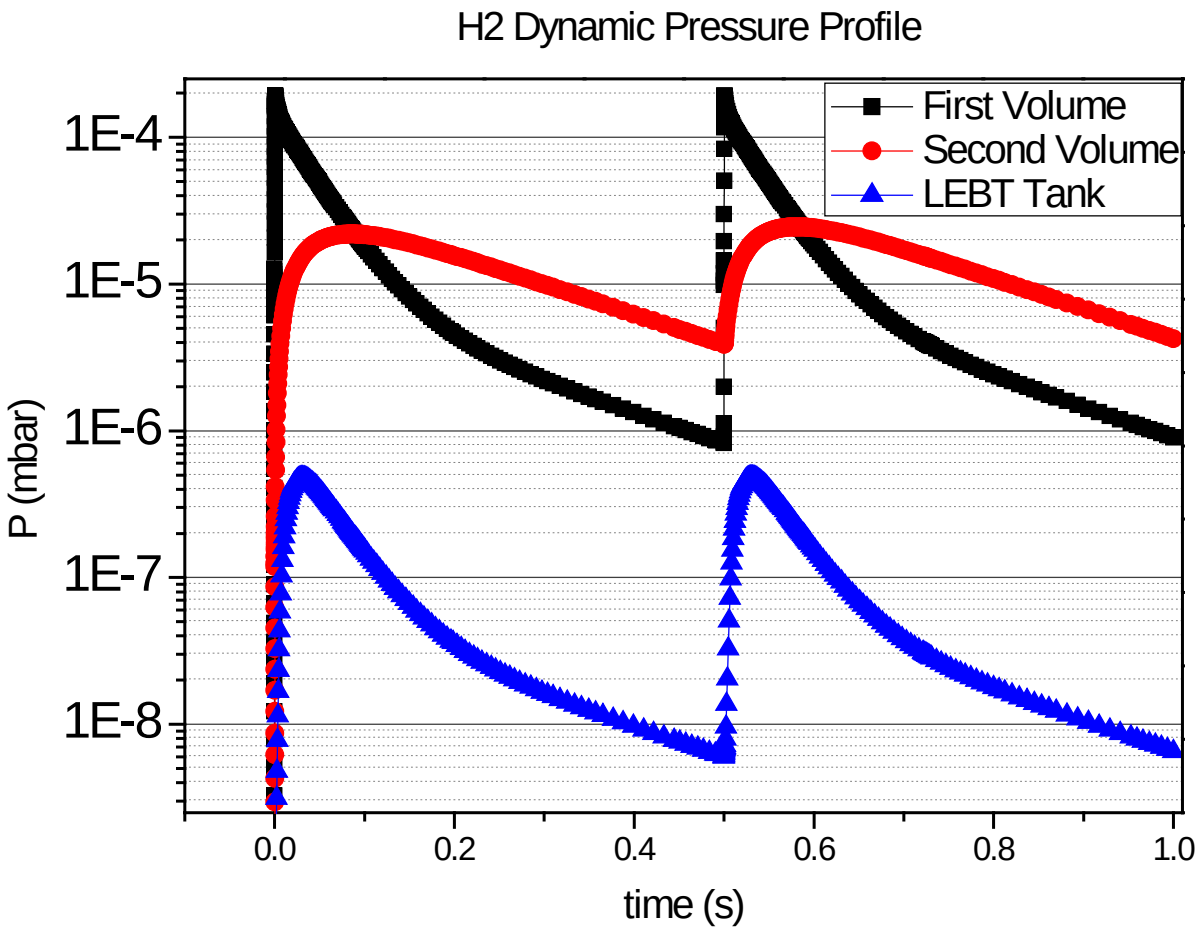

Time-dependent pressures at various points are solved using SPICE, an electric circuit simulation freeware.

Pressure Profile Calculation – Limitations

- *Results from one dimensional pressure profile calculations should be used with caution, though they are valuable design tools. It is most suitable for vacuum system with true uniform cross-section. It also works better for systems with distributed gas load and pumping.*
- *The accuracy of the results heavily depends on the calculation of the specific gas conductance. Even for simple cross sections (such as round and rectangular), often the used conductance is over-estimated, as the 'beaming' effect of continuous 'slices' of 'elements' is not considered.*
- *For complex beam pipe cross sections, Monte-Carlo methods are used to compute gas conductance.*
- *Another source of errors is in the estimation of gas loads, particularly the dynamic gas load, such as SR-induced desorption. Though it is relatively straight forward in calculating SR flux impinging on walls, the desorption yield is 'history' and spatially dependent.*

MOLFLOW+ – Test Particle Monte-Carlo

- *The TPMC method consists of calculating a large number of molecular trajectories in order to get a picture of a rarefied gas flow.*
- *Walls of a vacuum system are divided into planar facets. Test particles 'bounce' off facets with a cosine distributions, and continue be tracked until they exit the system, or into pumps. The facets can be assigned as pumps (with a sticking coefficient) or as gas sources.*
- *TPMC is best for computation of molecular flow conductance, but it can also generate 3D pressure profiles.*
- *Though the author (Roberto Kersevan) continues to improve the user-interface, MOLFLOW+ is still very difficult to use, and extremely time-consuming in initial setup.*

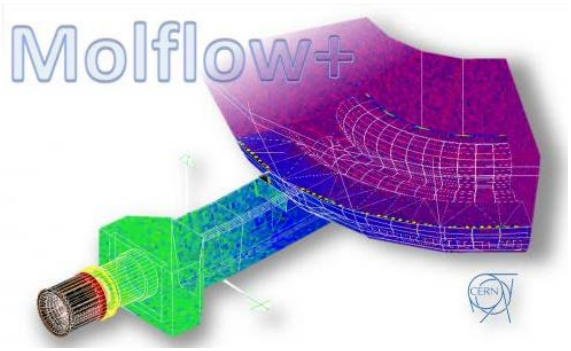

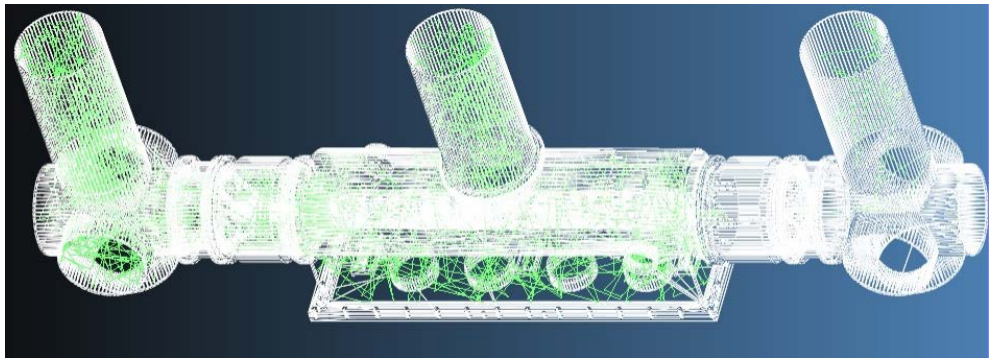

*REF: R. Kersevan and J.-L. Pons, JVST **A 27**(4) 2009, p1017*

The Following Slides are Courtesies of
Roberto Kersevan *of CERN,*
the Author and the developer of
MOLFLOW and MOLFLOW+

The Test Particle Monte Carlo: how does it work?

Calculate the molecular transmission probability of a tube.

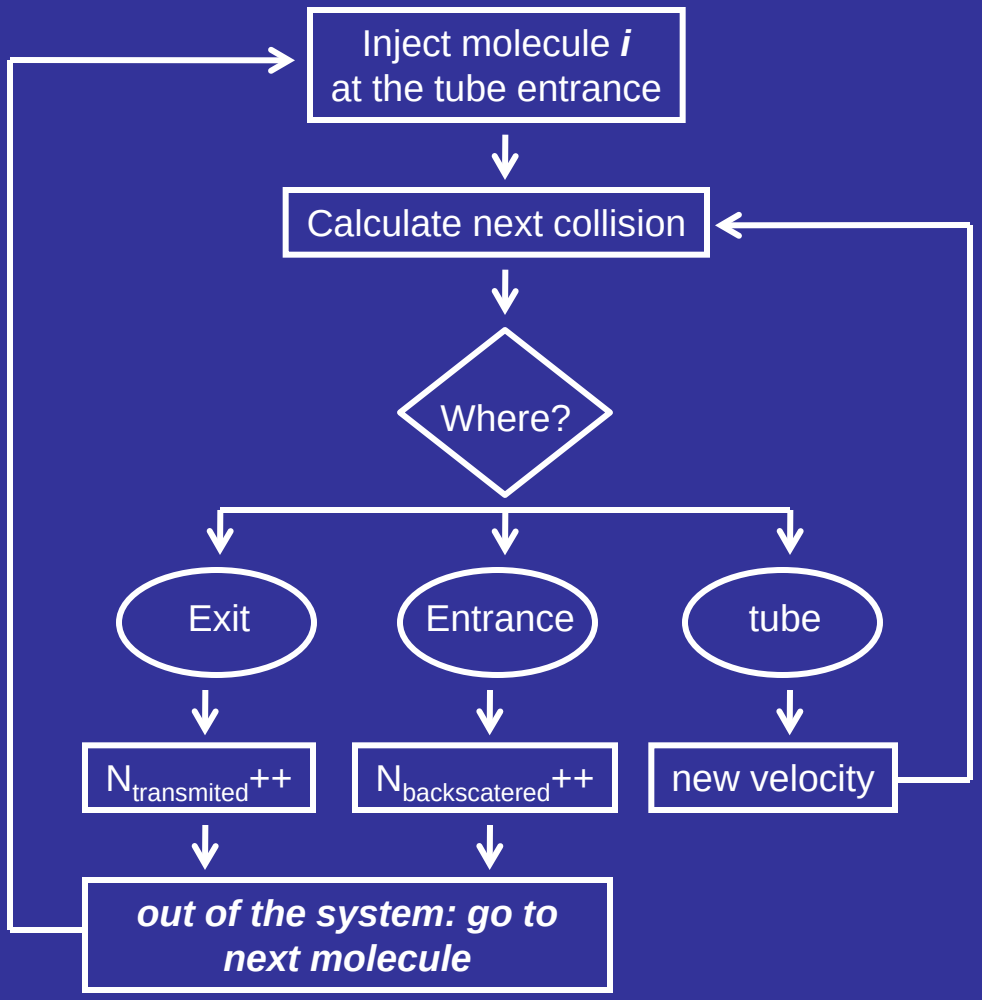

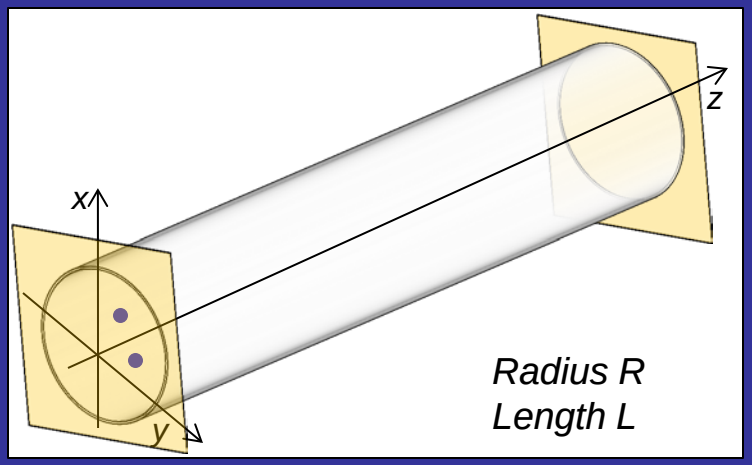

Transmission probability:

$$\alpha = \frac{N_{transmited}}{N_{total}}$$

backscattering probability:

$$\beta = \frac{N_{backscattered}}{N_{total}}$$

Standard deviation:

$$\sigma_\alpha = \sqrt{\frac{\alpha \cdot (1-\alpha)}{N_{total}}}$$

How Molecules Interact with a Wall

Adsorption

If adsorption time is long the molecule is pumped (getters, cold surfaces)

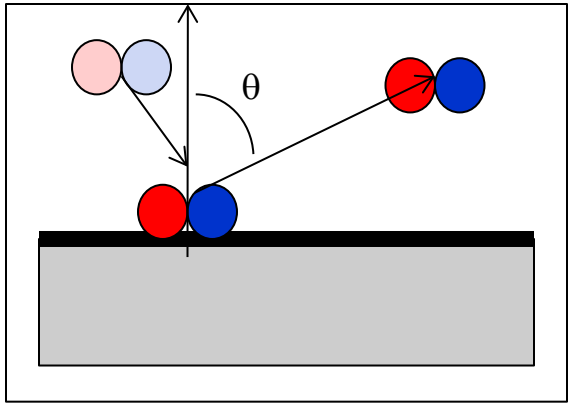

Desorption

If adsorption time is short (~10^{-11} s for physisorbed CO, N_2, O_2).

The angle of desorption, θ, is independent of the incident angle.

The "desorbed flux" follow the cosine law:

$$I(\theta) = I_0 \cos^n \theta \qquad n \geq 1$$

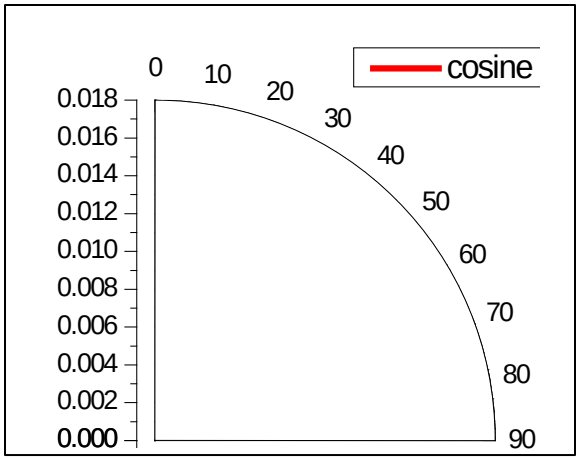

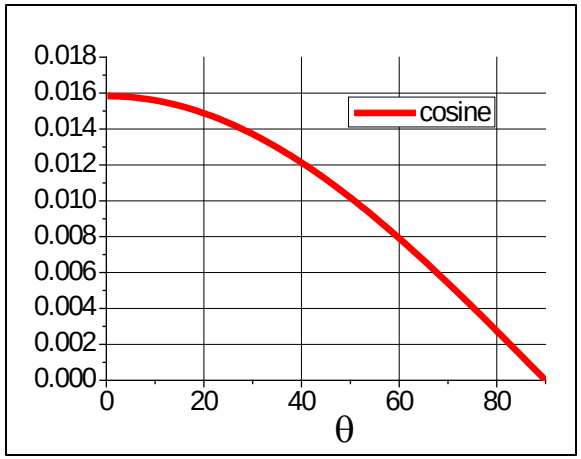

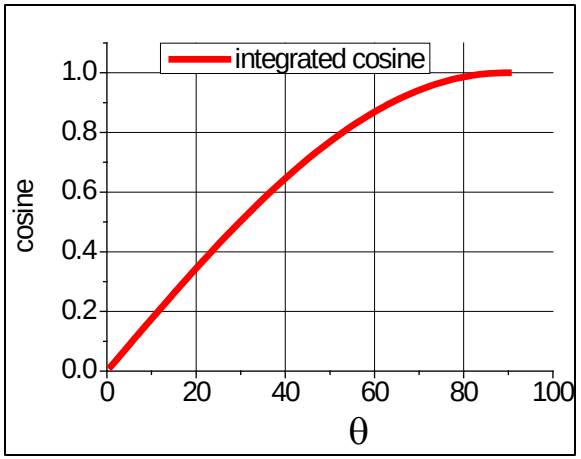

Knudsen's Cosine Law – Effusion

- Considering gas molecules exiting from on thin orifice (with area A). Assuming a much better vacuum above the orifice and a gas density below is in molecular flow region.

- The molecular flux (I_0) in the direction normal to the orifice is proportional to the density and the orifice area A.

- Assume that molecules exit the orifice isotropically, the flux (I_θ) at angle θ is also proportional to the density and a projected orifice areas $A \cdot \cos\theta$. Thus, we have the Knudsen's cosine law of effusion:

$$I_\theta = I_0 \cos\theta$$

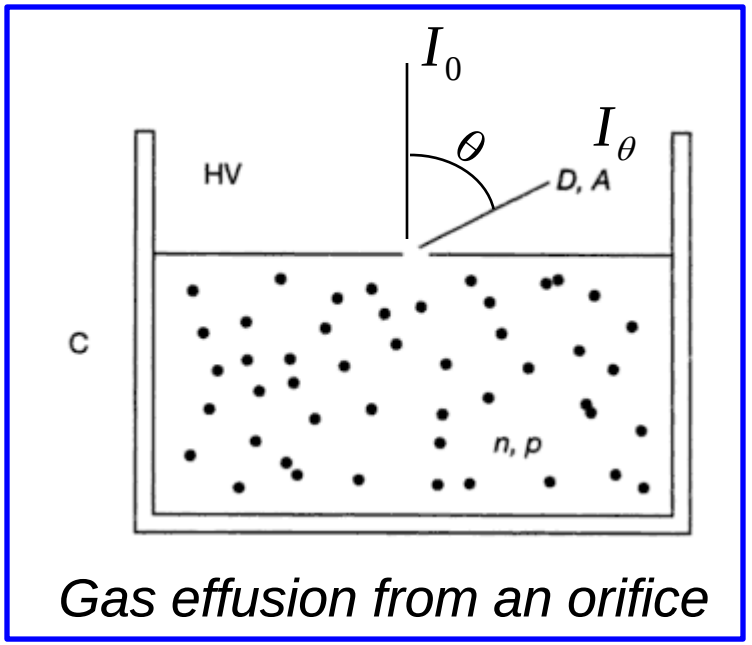

Gas effusion from an orifice

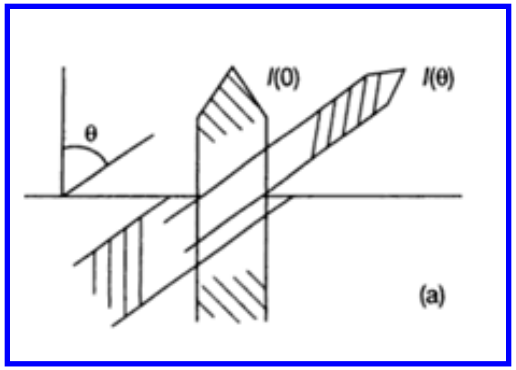

The Test Particle Monte Carlo: how does it work?

Calculate the transient pressure profile in a tube.

Define the sectors where the pressure must be computed (pressure counters);

Define sampling time (time for which we want to get the pressure profiles) :

$t_{sampling}[] = \{t_1, t_2, \ldots t_k\}$.

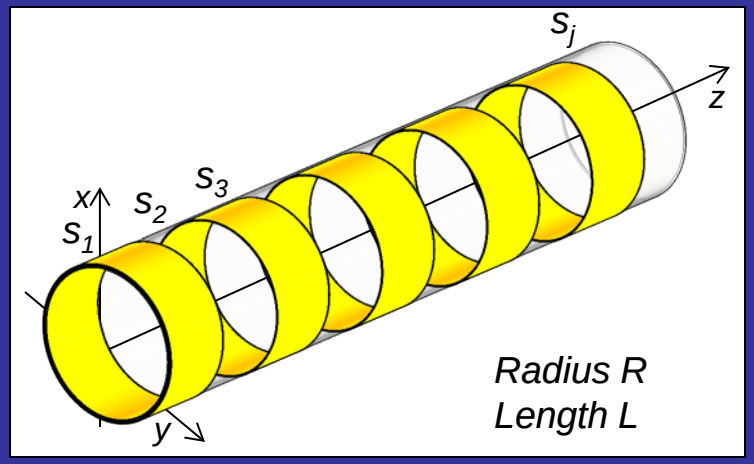

Inject molecules, calculate next interaction, (as for the transmission probability case), and for each time $t_{sampling}$ [] update pressure counters.

$$p_i = \frac{N_{sim,i}\, f}{V_i} k_b T, \quad f \text{ is the scaling factor } f = \frac{N_{real}}{N_{sim,total}}$$

The Test Particle Monte Carlo: how does it work?

If surfaces have sticking probability? (getters, cold surfaces)

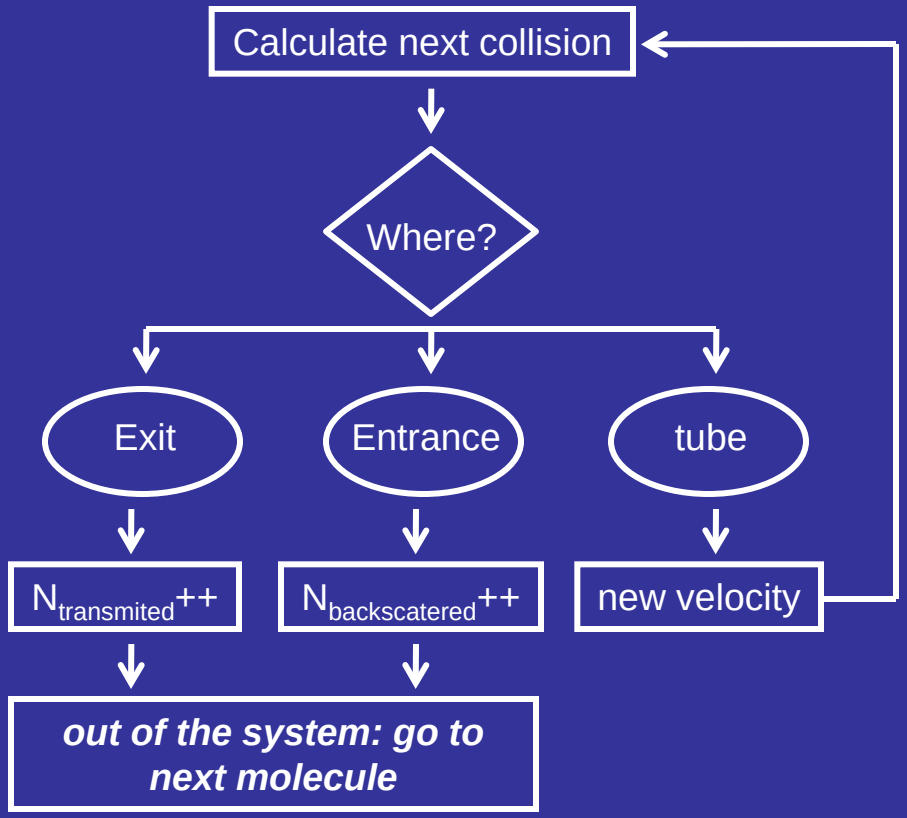

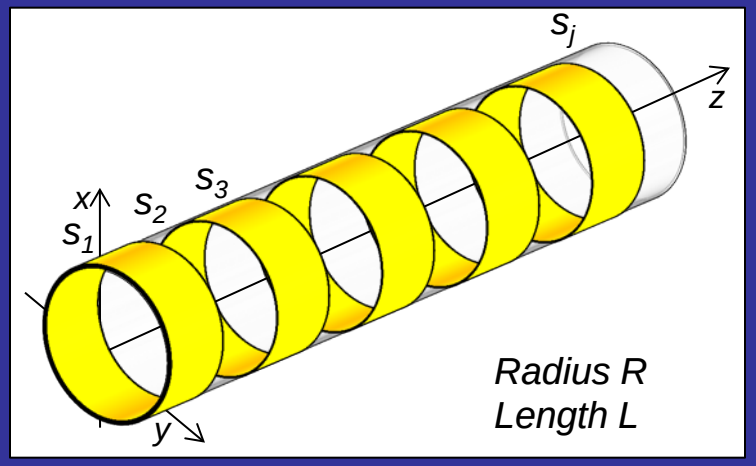

The Test Particle Monte Carlo: how does it work?

If surfaces have sticking probability? (getters, cold surfaces)

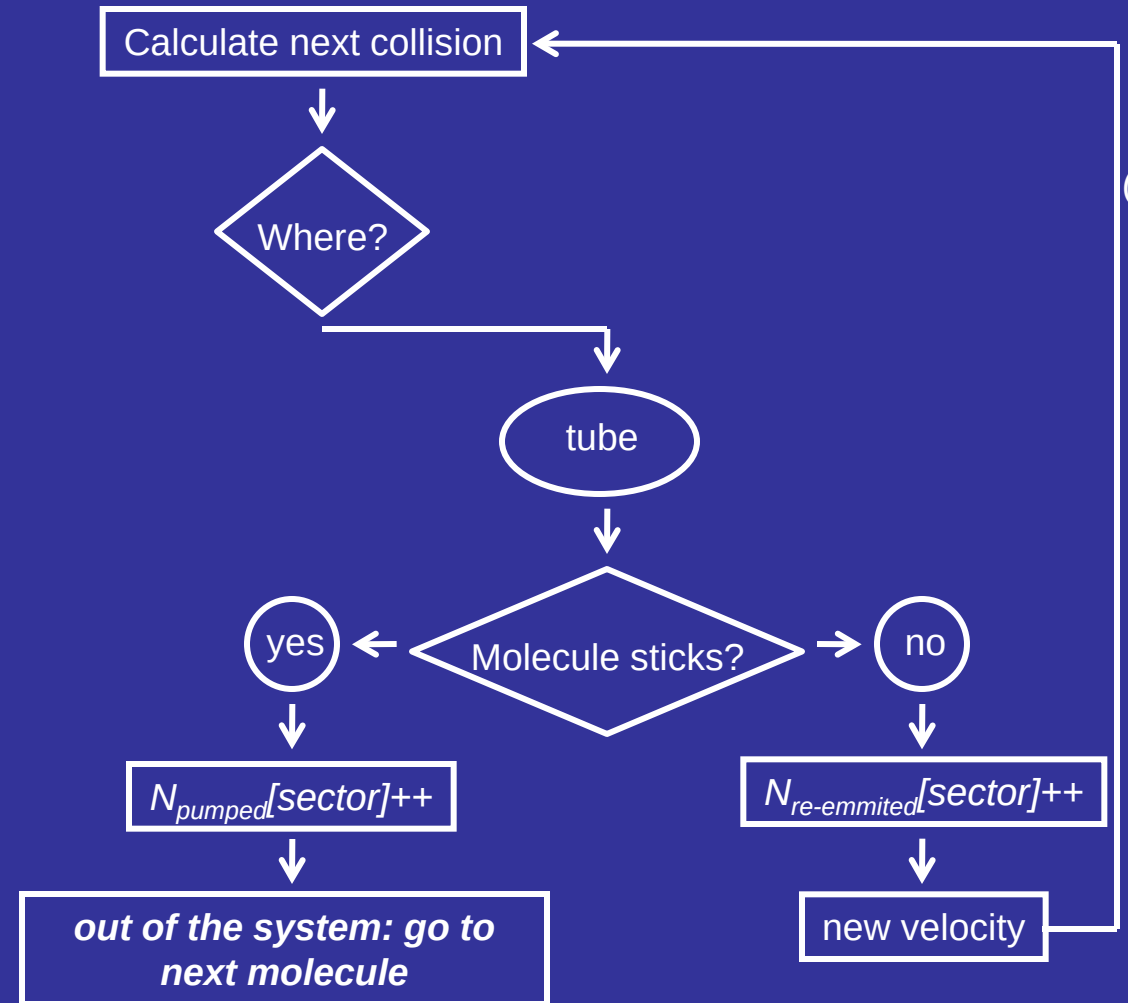

Molecule sticks?

If Rnd() < s the molecule sticks

Else re-emmited

(Rnd() is a function to generate random numbers uniformly distributed in [0,1]

N_{pumped}[sector] -> gives the distribution of the molecules pumped

$N_{re\text{-}emmited}$[sector] -> gives the pressure profile (via the impingement rate)

$$\nu[\text{sector}] = \frac{N_{re-emmited}[\text{sector}]}{N_{total} \cdot A[\text{sector}]} \cdot \frac{Q}{kT}$$

$$p[\text{sector}] = \frac{4kT}{\nu_a} \nu[\text{sector}]$$

$$p[\text{sector}] = \frac{4Q}{\nu_a} \frac{N_{re-emmited}[\text{sector}]}{N_{total} \cdot A[\text{sector}]}$$

The Test Particle Monte Carlo: Examples.

Steady state pressure profile in a tube

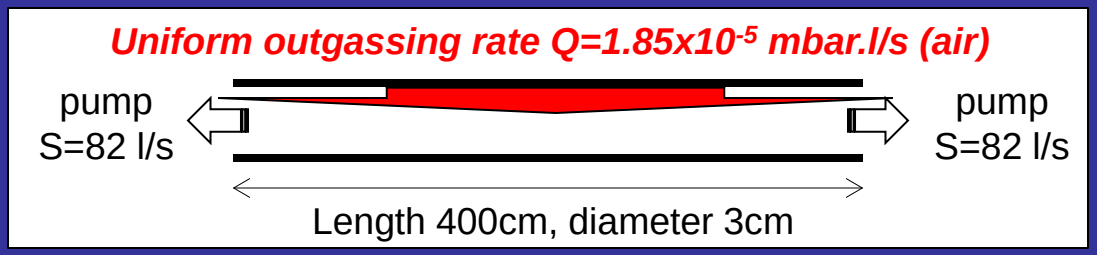

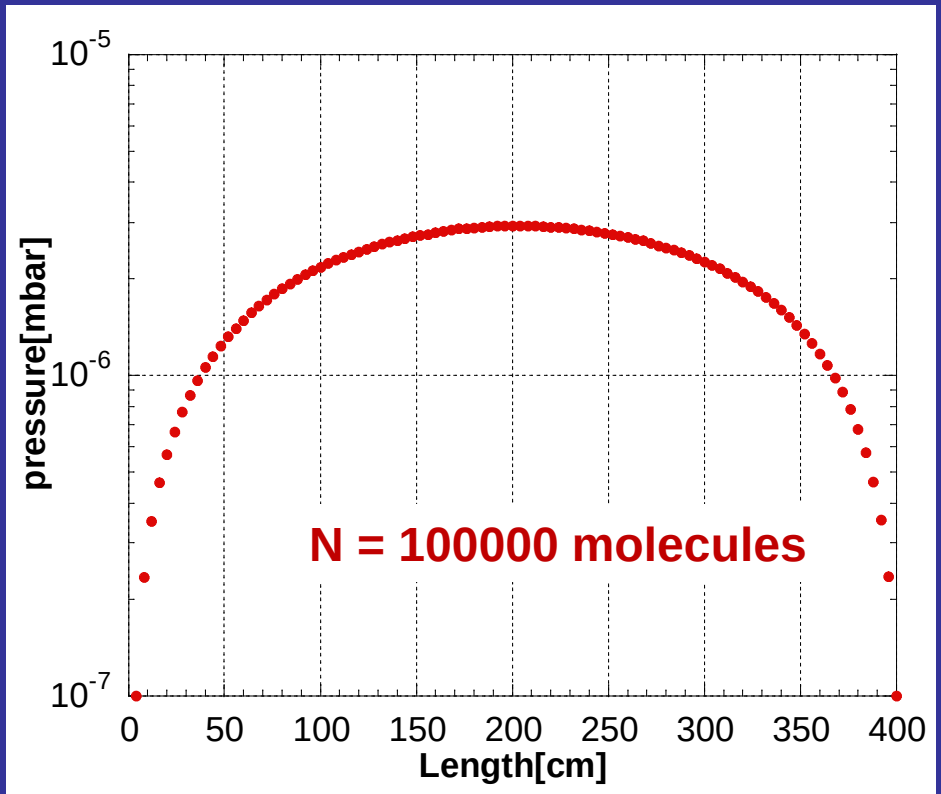

The Test Particle Monte Carlo: Examples.

Transient pressure profile after a pressure burst in a tube

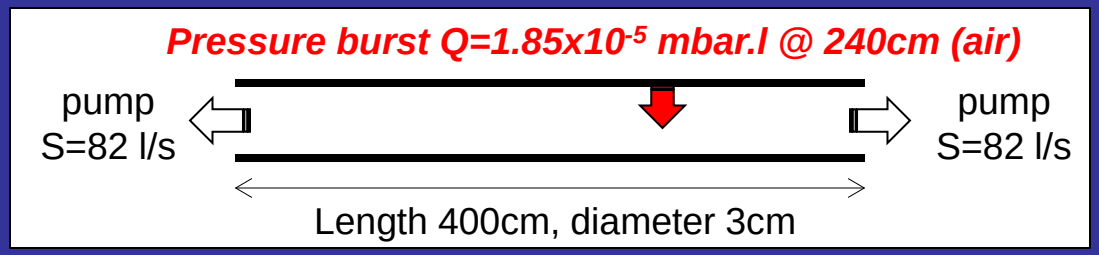

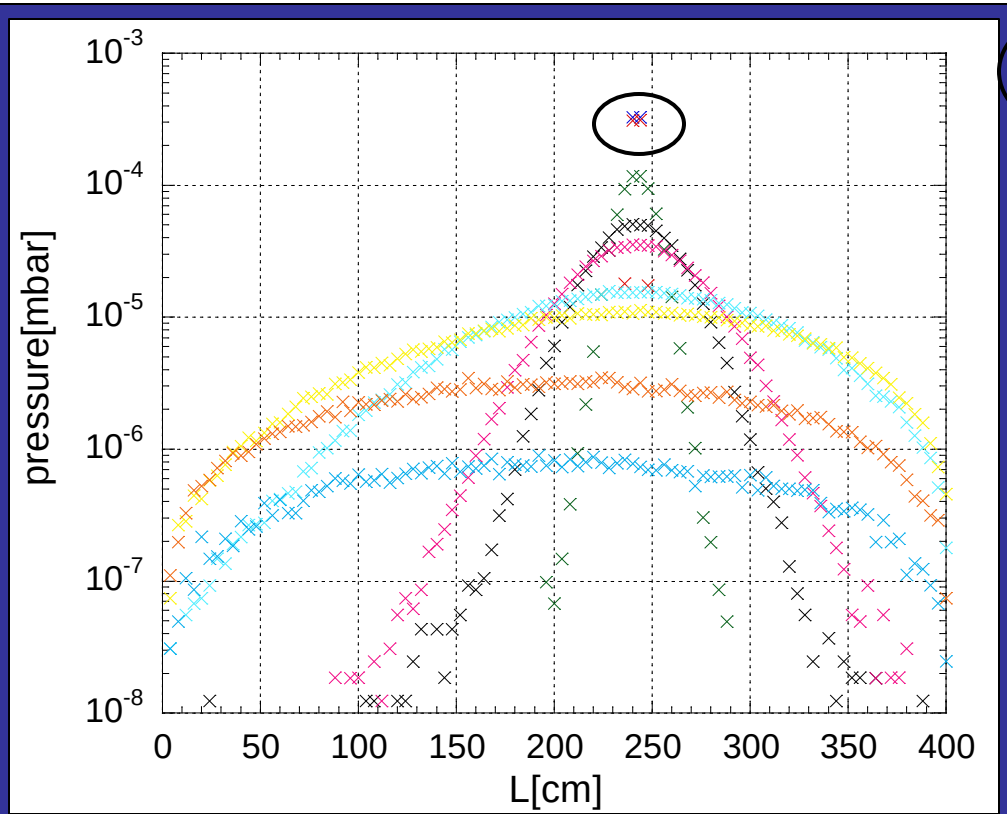

Length of sector = 4m/100

Velocity air molecule at 25°C ~ 500 m/s

Time to fly along a sector ~ length / velocity = 8x10-5 s

The Test Particle Monte Carlo: if you don't want to write the code?**.**

MolFlow+

Written by Roberto Kersevan (former leader of the Vacuum group at ESRF; since July 2009 at ITER, now at CERN)

Developed since 1991, (started at CERN), in Turbo Pascal. used mainly in accelerators laboratories **(**Diamond Light Source, BNL, Elettra, Alba, Sesame, ASTeC, FermiLab, Cornell, and more). Old versions not very user friendly…

New version since 2008: written in C/C++ under Windows XP/ OpenGL, fast, optimized for multi core CPUs (parallelization)… user friendly graphic interface, but lacks a serious manual…

Geometries can be imported in 3D-CAD format (.STL, common to the main CAD programs)

The program can be obtained directly from the author:

Roberto Kersevan <roberto.kersevan@cern.ch>

The Test Particle Monte Carlo: if you don't want to write the code?**.**

MolFlow+

Procedure:

3D CAD drawing

Import into Molflow+ (.STL)

Attention: version 2.1 only accepts ASCII type .STL files

Configure simulation model:
Define facets, desorption, pumping, opacity, etc

Where the user spend more time: the .STL file loads surfaces built with triangles. The user must "collapse" some of this triangles by groups in order to define the usefull facets for the simulation. Less facets also means faster runs!

Define outputs:
Profiles: pressure, angular distributions, formulas.

Pressure and angular profiles can be plotted for "real" facets or for "virtual" facets, (imposed to the model just for this purpose). For example, if we want to plot the pressure along the transversal plane of a tube.

RUN

Practical results within a few seconds to hours, depending on geometry. (1,550,000 hits/s in a 2.4GHz dual core CPU)

The Test Particle Monte Carlo: if you don't want to write the code?**.**

Example with MolFlow+: pumping port at ESRF

Courtesy of Roberto Kersevan, ITER

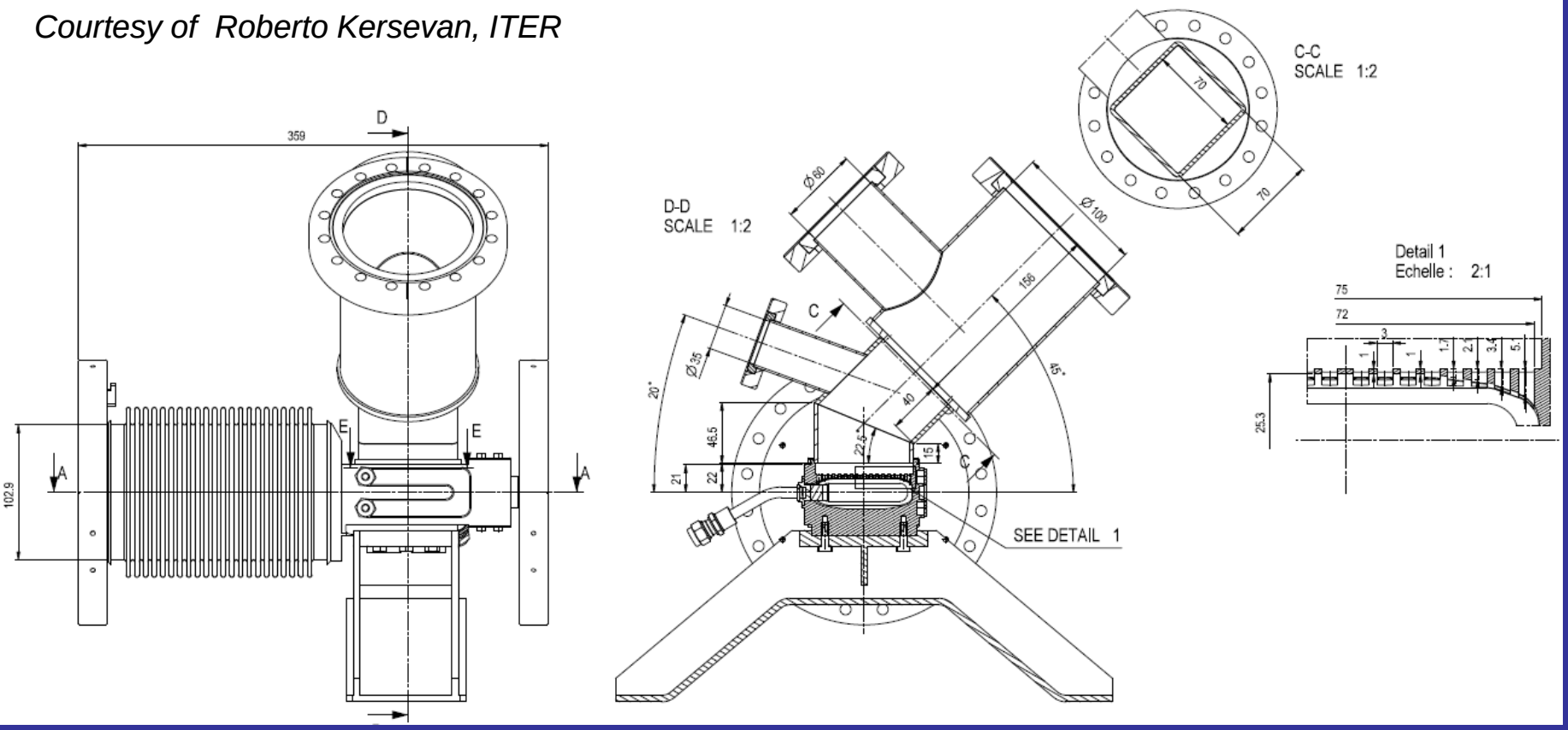

The Test Particle Monte Carlo: if you don't want to write the code?**.**

Example with MolFlow+: pumping port at ESRF

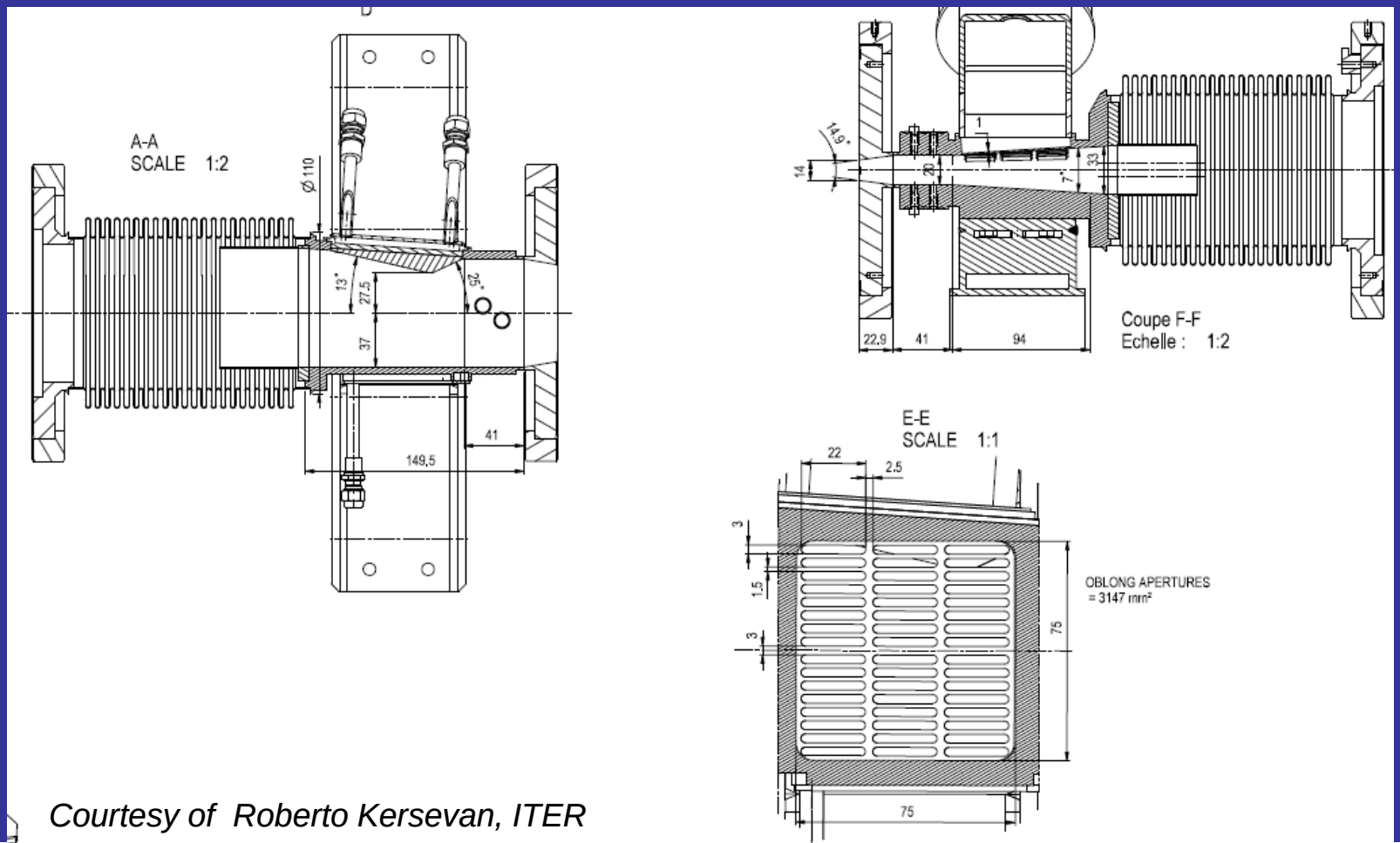

Courtesy of Roberto Kersevan, ITER

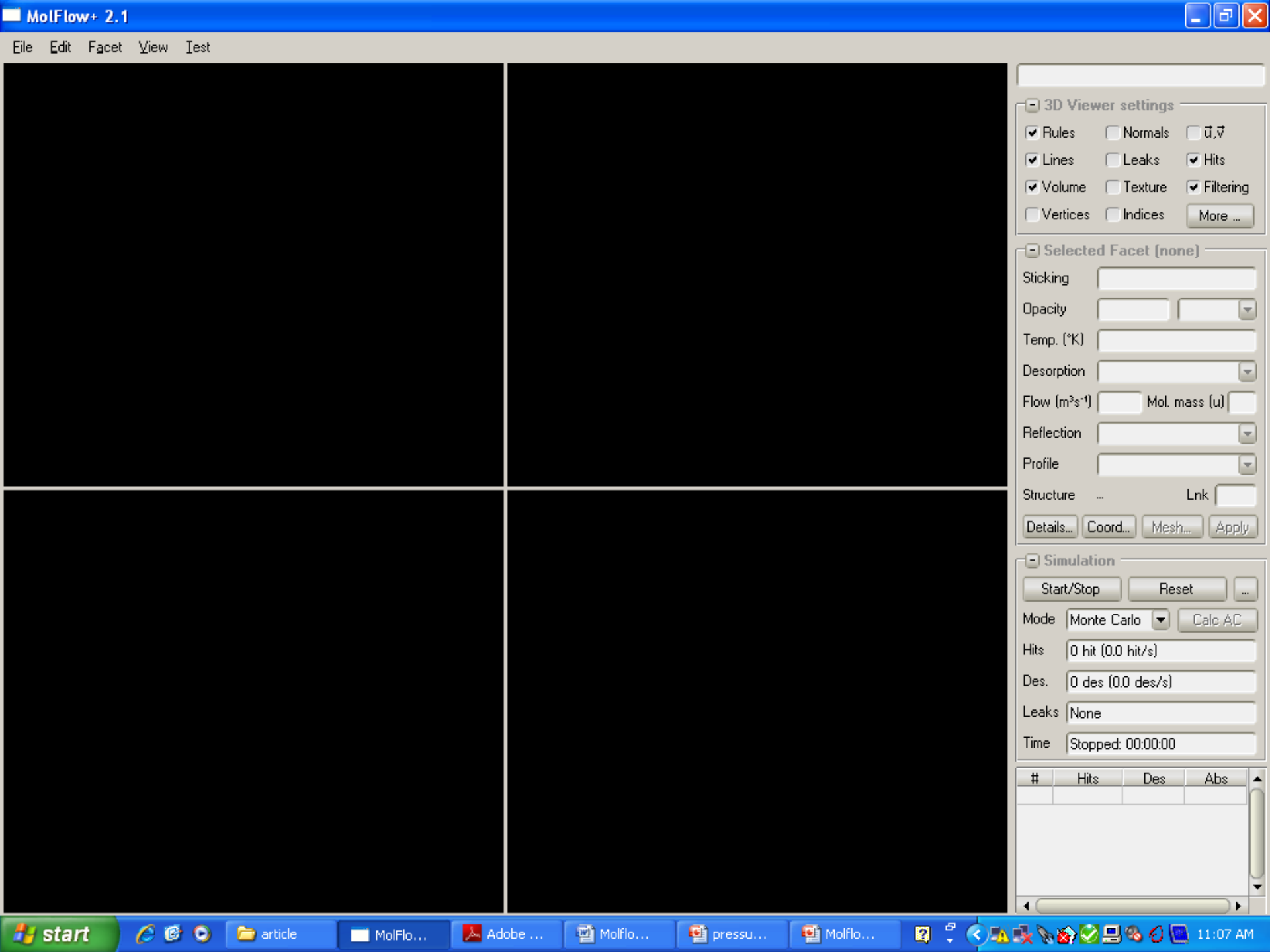
MolFlow+ 2.1
File Edit Facet View Test
3D Viewer settings
Rules Normals u,v
Lines Leaks Hits
Volume Texture Filtering
Vertices Indices More ...
Selected Facet (none)
Sticking
Opacity
Temp. (°K)
Desorption
Flow (m³s⁻¹)
Mol. mass (u)
Reflection
Profile
Structure ...
Lnk
Details... Coord... Mesh... Apply
Simulation
Start/Stop Reset ...
Mode Monte Carlo Calc AC
Hits 0 hit (0.0 hit/s)
Des. 0 des (0.0 des/s)
Leaks None
Time Stopped: 00:00:00
Hits Des Abs
start
article
MolFlo...
Adobe ...
Molflo...
pressu...
Molflo...
11:07 AM

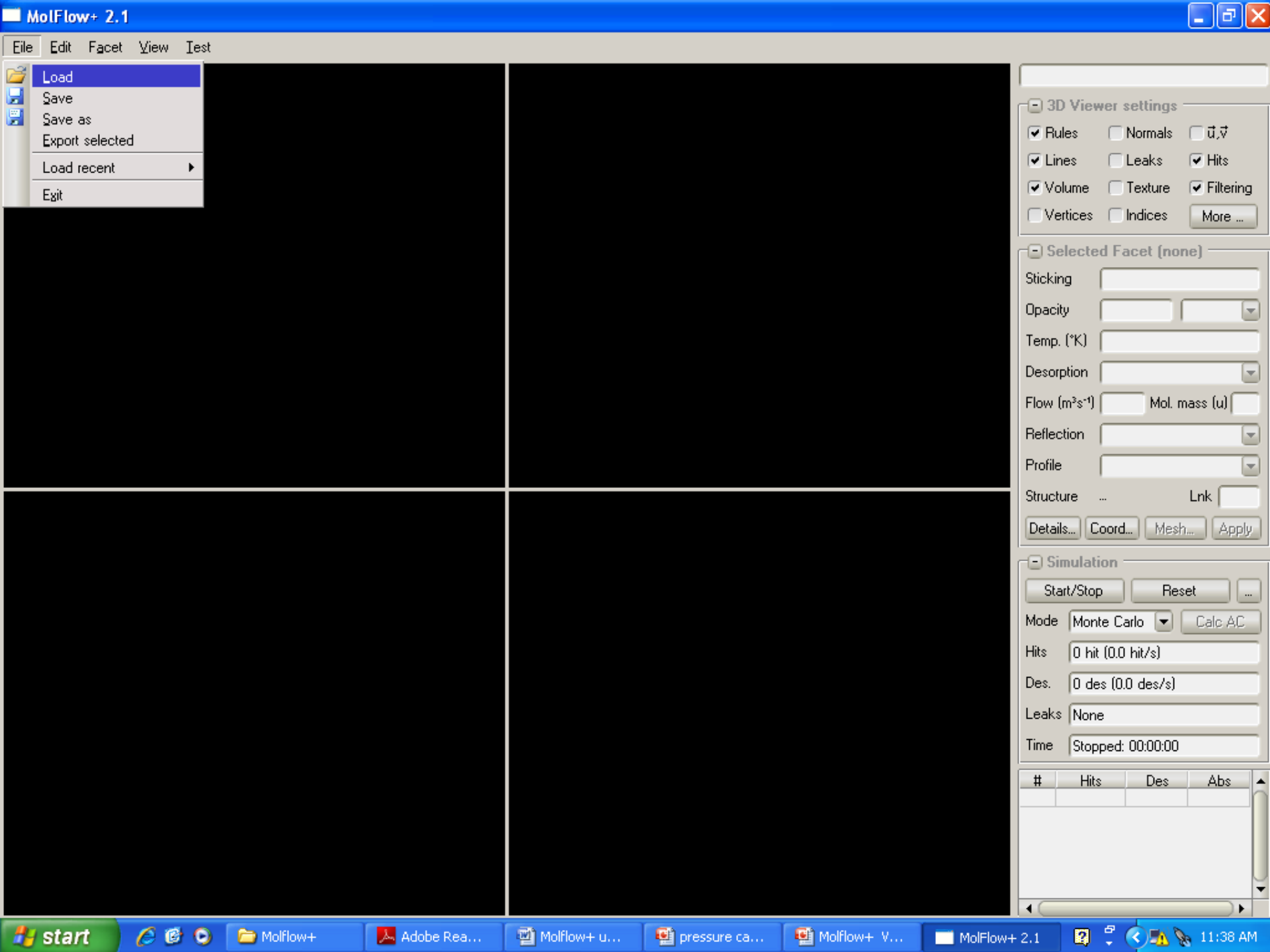
MolFlow+ 2.1
File
Edit
Facet
View
Test
Load
Save
Save as
Export selected
Load recent
Exit
3D Viewer settings
Rules
Normals
u,v
Lines
Leaks
Hits
Volume
Texture
Filtering
Vertices
Indices
More ...
Selected Facet (none)
Sticking
Opacity
Temp. (°K)
Desorption
Flow (m³s⁻¹)
Mol. mass (u)
Reflection
Profile
Structure
...
Lnk
Details...
Coord...
Mesh...
Apply
Simulation
Start/Stop
Reset
...
Mode
Monte Carlo
Calc AC
Hits
0 hit (0.0 hit/s)
Des.
0 des (0.0 des/s)
Leaks
None
Time
Stopped: 00:00:00
#
Hits
Des
Abs
start
Molflow+
Adobe Rea...
Molflow+ u...
pressure ca...
Molflow+ V...
MolFlow+ 2.1
11:38 AM

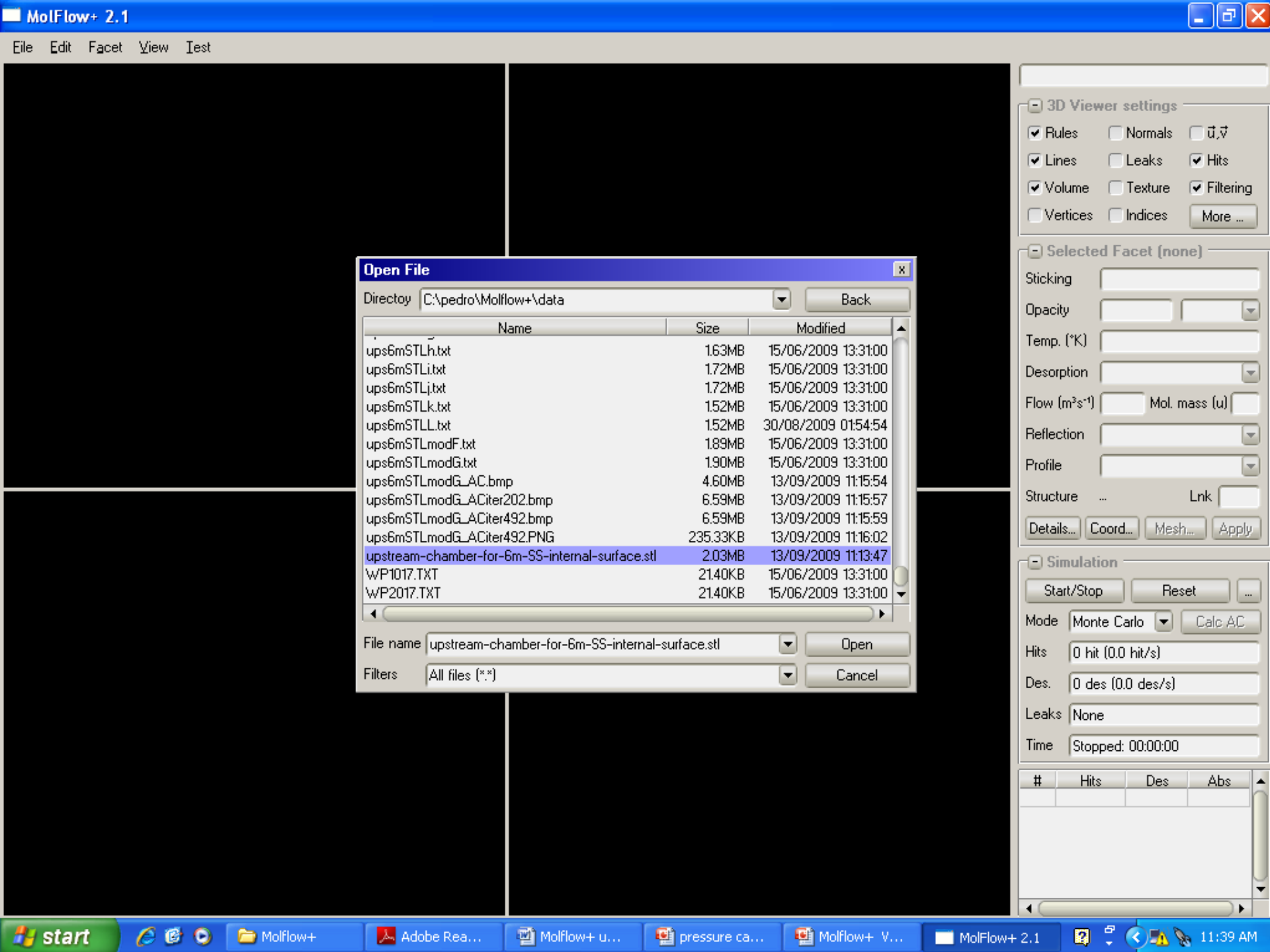
MolFlow+ 2.1
File Edit Facet View Test
3D Viewer settings
Rules
Normals
u,v
Lines
Leaks
Hits
Volume
Texture
Filtering
Vertices
Indices
More ...
Selected Facet (none)
Sticking
Opacity
Temp. (°K)
Desorption
Flow (m³s⁻¹)
Mol. mass (u)
Reflection
Profile
Structure ...
Lnk
Details...
Coord...
Mesh...
Apply
Simulation
Start/Stop
Reset
Mode
Monte Carlo
Calc AC
Hits
0 hit (0.0 hit/s)
Des.
0 des (0.0 des/s)
Leaks
None
Time
Stopped: 00:00:00
Hits Des Abs
Open File
Directoy
C:\pedro\Molflow+\data
Back
Name Size Modified
ups6mSTLh.txt 1.63MB 15/06/2009 13:31:00
ups6mSTLi.txt 1.72MB 15/06/2009 13:31:00
ups6mSTLj.txt 1.72MB 15/06/2009 13:31:00
ups6mSTLk.txt 1.52MB 15/06/2009 13:31:00
ups6mSTLL.txt 1.52MB 30/08/2009 01:54:54
ups6mSTLmodF.txt 1.89MB 15/06/2009 13:31:00
ups6mSTLmodG.txt 1.90MB 15/06/2009 13:31:00
ups6mSTLmodG_AC.bmp 4.60MB 13/09/2009 11:15:54
ups6mSTLmodG_ACiter202.bmp 6.59MB 13/09/2009 11:15:57
ups6mSTLmodG_ACiter492.bmp 6.59MB 13/09/2009 11:15:59
ups6mSTLmodG_ACiter492.PNG 235.33KB 13/09/2009 11:16:02
upstream-chamber-for-6m-SS-internal-surface.stl 2.03MB 13/09/2009 11:13:47
WP1017.TXT 21.40KB 15/06/2009 13:31:00
WP2017.TXT 21.40KB 15/06/2009 13:31:00
File name
upstream-chamber-for-6m-SS-internal-surface.stl
Open
Filters
All files (*.*)
Cancel
start
Molflow+
Adobe Rea...
Molflow+ u...
pressure ca...
Molflow+ V...
MolFlow+ 2.1
11:39 AM

MolFlow+ 2.1 [upstream-chamber-for-6m-SS-internal-surface.stl]

File Edit Facet View Test

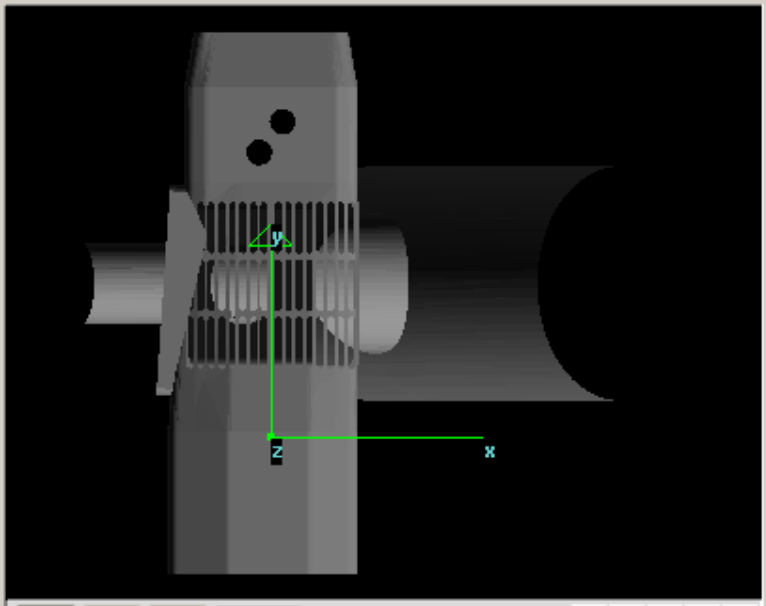

Front Top Side Ortho. X=154.134, Y=-55.3791

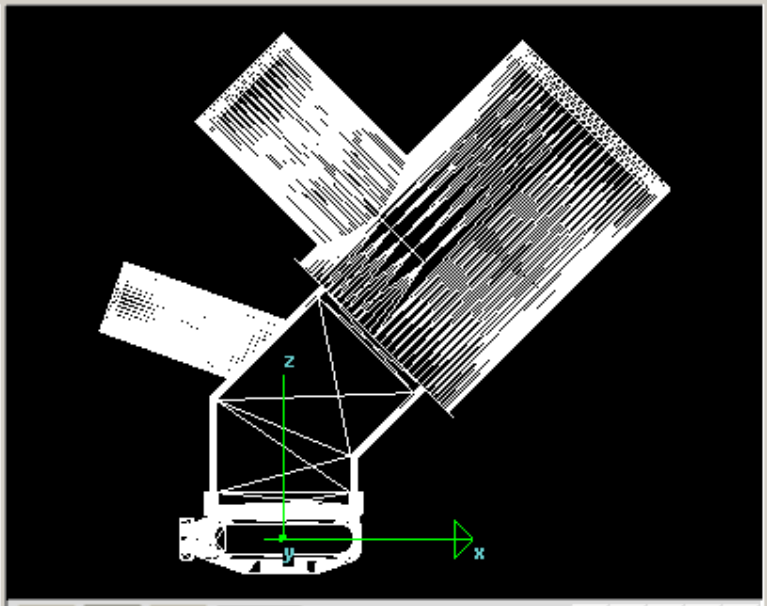

Front Top Side Ortho. X=-51.3888, Z=-14.138

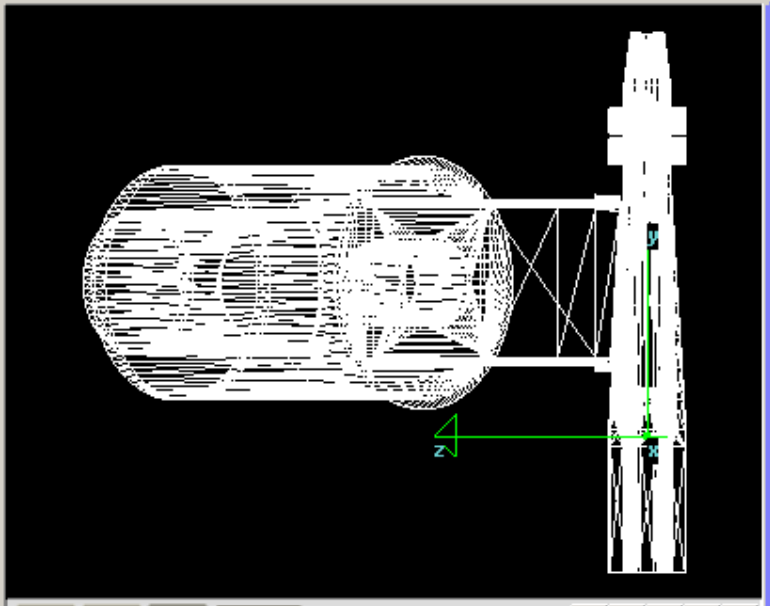

Front Top Side Ortho. Z=-15.9289, Y=122.941

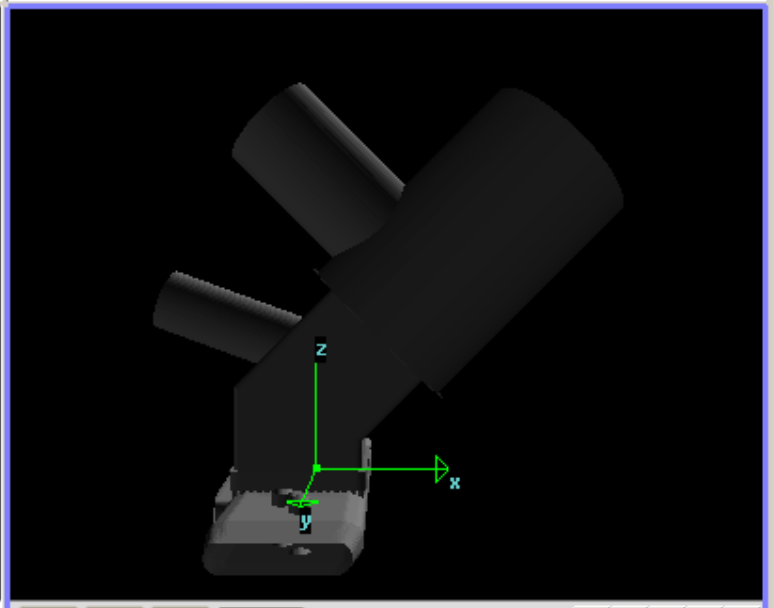

Front Top Side Persp.

V:22854 F:7618 Dim:(271.906,230.75,257.3

3D Viewer settings

Rules	Normals	u,v
Lines	Leaks	Hits
Volume	Texture	Filtering
Vertices	Indices	More ...

Selected Facet (none)

Sticking
Opacity
Temp. (°K)
Desorption
Flow (m³s⁻¹) Mol. mass (u)
Reflection
Profile
Structure ... Lnk
Details... Coord... Mesh... Apply

Simulation

Start/Stop Reset ...
Mode Monte Carlo Calc AC
Hits 0 hit (0.0 hit/s)
Des. 0 des (0.0 des/s)
Leaks None
Time Stopped: 00:00:00

#	Hits	Des	Abs
341	0	0	0
342	0	0	0
343	0	0	0
344	0	0	0
345	0	0	0
346	0	0	0

start Molflow+ Adobe Rea... Molflow+ u... pressure ca... Molflow+ V... MolFlow+ 2... 11:41 AM

MolFlow+ 2.0 [ups6m5TLmodG.txt]

File Edit Facet View Test

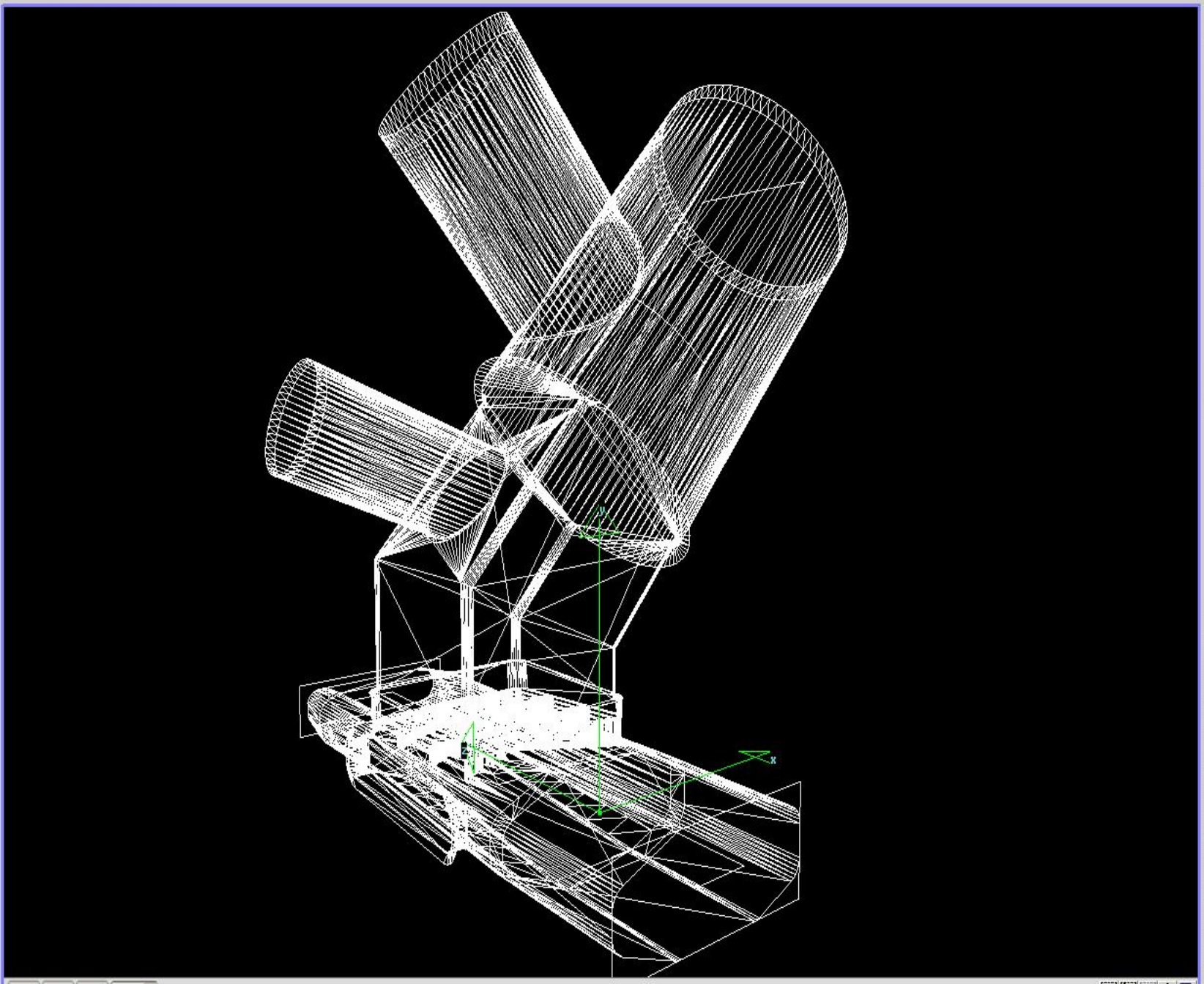

Front Top Side Persp.

V:4060 F:7295 Dim:(271.906,257.377,230.

3D Viewer settings

Rules Normals u,v
Lines Leaks Hits
Volume Texture Filtering
Vertices Indices More ...

Selected Facet (none)

Sticking
Opacity
Structure ... Lnk
Desorption
Reflection
Profile
Details... Coord... Mesh... Apply

Simulation

Start/Stop Reset ...
Mode Monte Carlo Calc AC
Hits 3.75 Mhit (0.0 hit/s)
Des. 22.0 Kdes (0.0 des/s)
Leaks None
Time Stopped: 00:00:00

#	Hits	Des	Abs
3649	4628	0	0
3650	4918	0	0
3651	4588	0	0
3652	4931	0	0
3653	4689	0	0
3654	4873	0	0
3655	4663	0	0
3656	4884	0	0
3657	4602	0	0
3658	4701	0	0
3659	4707	0	0
3660	4838	0	0
3661	4683	0	0
3662	4935	0	0
3663	4666	0	0
3664	4934	0	0
3665	4644	0	0
3666	4839	0	0
3667	4691	0	0
3668	4865	0	0
3669	4638	0	0
3670	4862	0	0

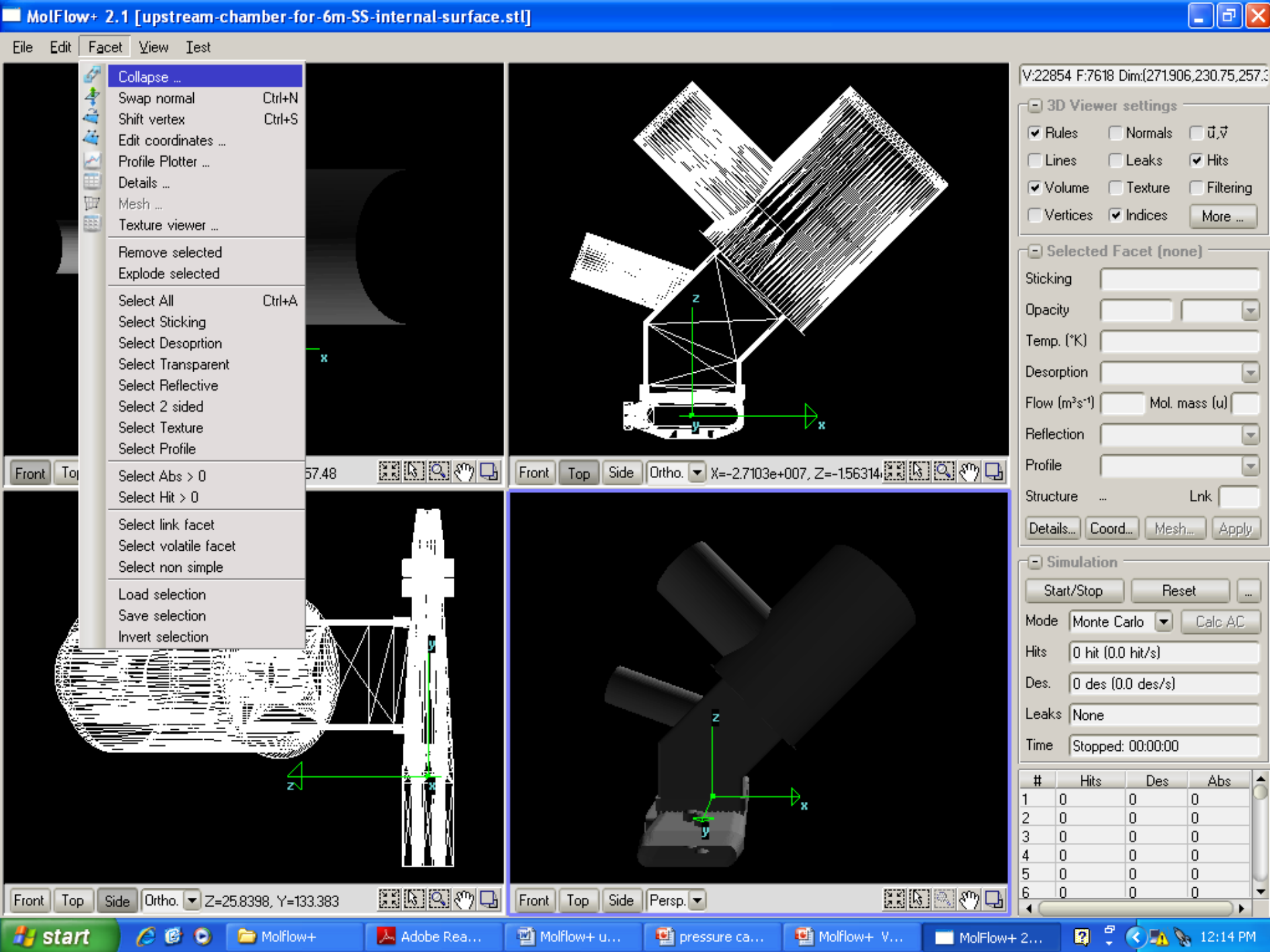
MolFlow+ 2.1 [upstream-chamber-for-6m-SS-internal-surface.stl]
File Edit Facet View Test
Collapse ...
Swap normal Ctrl+N
Shift vertex Ctrl+S
Edit coordinates ...
Profile Plotter ...
Details ...
Mesh ...
Texture viewer ...
Remove selected
Explode selected
Select All Ctrl+A
Select Sticking
Select Desoprtion
Select Transparent
Select Reflective
Select 2 sided
Select Texture
Select Profile
Select Abs > 0
Select Hit > 0
Select link facet
Select volatile facet
Select non simple
Load selection
Save selection
Invert selection
V:22854 F:7618 Dim:(271.906,230.75,257.3
3D Viewer settings
Rules Normals
Lines Leaks Hits
Volume Texture Filtering
Vertices Indices More ...
Selected Facet (none)
Sticking
Opacity
Temp. (°K)
Desorption
Flow (m³s⁻¹) Mol. mass (u)
Reflection
Profile
Structure ... Lnk
Details... Coord... Mesh... Apply
Simulation
Start/Stop Reset
Mode Monte Carlo Calc AC
Hits 0 hit (0.0 hit/s)
Des. 0 des (0.0 des/s)
Leaks None
Time Stopped: 00:00:00
Hits Des Abs
1 0 0 0
2 0 0 0
3 0 0 0
4 0 0 0
5 0 0 0
6 0 0 0
Front Top Side Ortho. X=-2.7103e+007, Z=-1.56314
Front Top Side Ortho. Z=25.8398, Y=133.383
Front Top Side Persp.
start
Molflow+
Adobe Rea...
Molflow+ u...
pressure ca...
Molflow+ V...
MolFlow+ 2...
12:14 PM

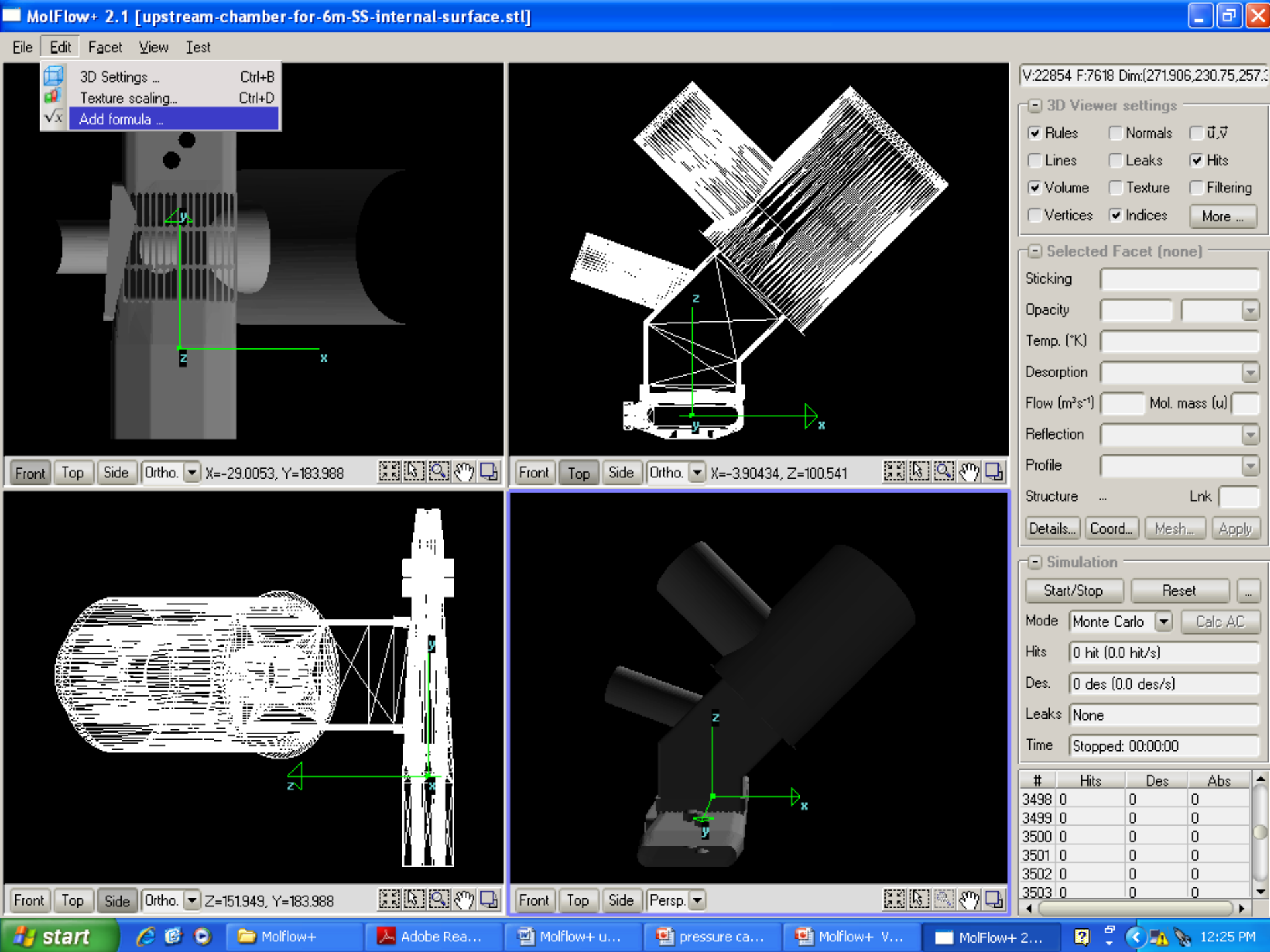
MolFlow+ 2.1 [upstream-chamber-for-6m-SS-internal-surface.stl]
File
Edit
Facet
View
Test
3D Settings ... Ctrl+B
Texture scaling... Ctrl+D
Add formula ...
V:22854 F:7618 Dim:(271.906,230.75,257.3
3D Viewer settings
Rules
Normals
Lines
Leaks
Hits
Volume
Texture
Filtering
Vertices
Indices
More ...
Selected Facet (none)
Sticking
Opacity
Temp. (°K)
Desorption
Flow (m³s⁻¹)
Mol. mass (u)
Reflection
Profile
Structure
Lnk
Details...
Coord...
Mesh...
Apply
Simulation
Start/Stop
Reset
Mode
Monte Carlo
Calc AC
Hits
0 hit (0.0 hit/s)
Des.
0 des (0.0 des/s)
Leaks
None
Time
Stopped: 00:00:00
Hits Des Abs
3498 0 0 0
3499 0 0 0
3500 0 0 0
3501 0 0 0
3502 0 0 0
3503 0 0 0
Front Top Side Ortho. X=-29.0053, Y=183.988
Front Top Side Ortho. X=-3.90434, Z=100.541
Front Top Side Ortho. Z=151.949, Y=183.988
Front Top Side Persp.
start
Molflow+
Adobe Rea...
Molflow+ u...
pressure ca...
Molflow+ V...
MolFlow+ 2...
12:25 PM

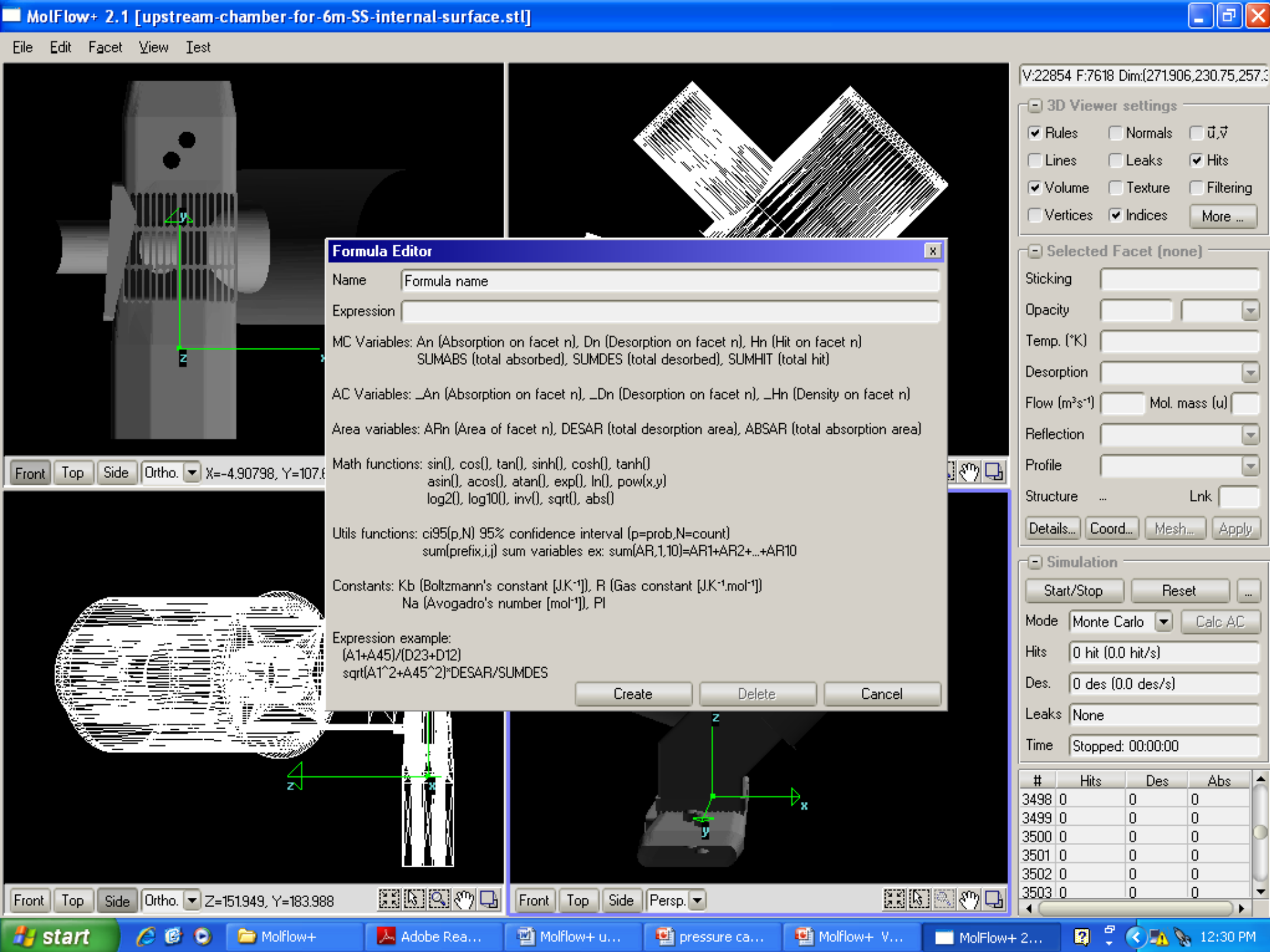
MolFlow+ 2.1 [upstream-chamber-for-6m-SS-internal-surface.stl]
File Edit Facet View Test
V:22854 F:7618 Dim:(271.906,230.75,257.3
3D Viewer settings
Rules Normals
Lines Leaks Hits
Volume Texture Filtering
Vertices Indices More ...
Selected Facet (none)
Sticking
Opacity
Temp. (°K)
Desorption
Flow (m³s⁻¹) Mol. mass (u)
Reflection
Profile
Structure ... Lnk
Details... Coord... Mesh... Apply
Simulation
Start/Stop Reset
Mode Monte Carlo Calc AC
Hits 0 hit (0.0 hit/s)
Des. 0 des (0.0 des/s)
Leaks None
Time Stopped: 00:00:00
Hits Des Abs
3498 0 0 0
3499 0 0 0
3500 0 0 0
3501 0 0 0
3502 0 0 0
3503 0 0 0
Formula Editor
Name Formula name
Expression
MC Variables: An (Absorption on facet n), Dn (Desorption on facet n), Hn (Hit on facet n)
SUMABS (total absorbed), SUMDES (total desorbed), SUMHIT (total hit)
AC Variables: _An (Absorption on facet n), _Dn (Desorption on facet n), _Hn (Density on facet n)
Area variables: ARn (Area of facet n), DESAR (total desorption area), ABSAR (total absorption area)
Math functions: sin(), cos(), tan(), sinh(), cosh(), tanh()
asin(), acos(), atan(), exp(), ln(), pow(x,y)
log2(), log10(), inv(), sqrt(), abs()
Utils functions: ci95(p,N) 95% confidence interval (p=prob,N=count)
sum(prefix,i,j) sum variables ex: sum(AR,1,10)=AR1+AR2+...+AR10
Constants: Kb (Boltzmann's constant [J.K⁻¹]), R (Gas constant [J.K⁻¹.mol⁻¹])
Na (Avogadro's number [mol⁻¹]), PI
Expression example:
(A1+A45)/(D23+D12)
sqrt(A1^2+A45^2)*DESAR/SUMDES
Create Delete Cancel
Front Top Side Ortho. X=-4.90798, Y=107.
Front Top Side Ortho. Z=151.949, Y=183.988
Front Top Side Persp.
start Molflow+ Adobe Rea... Molflow+ u... pressure ca... Molflow+ V... MolFlow+ 2... 12:30 PM

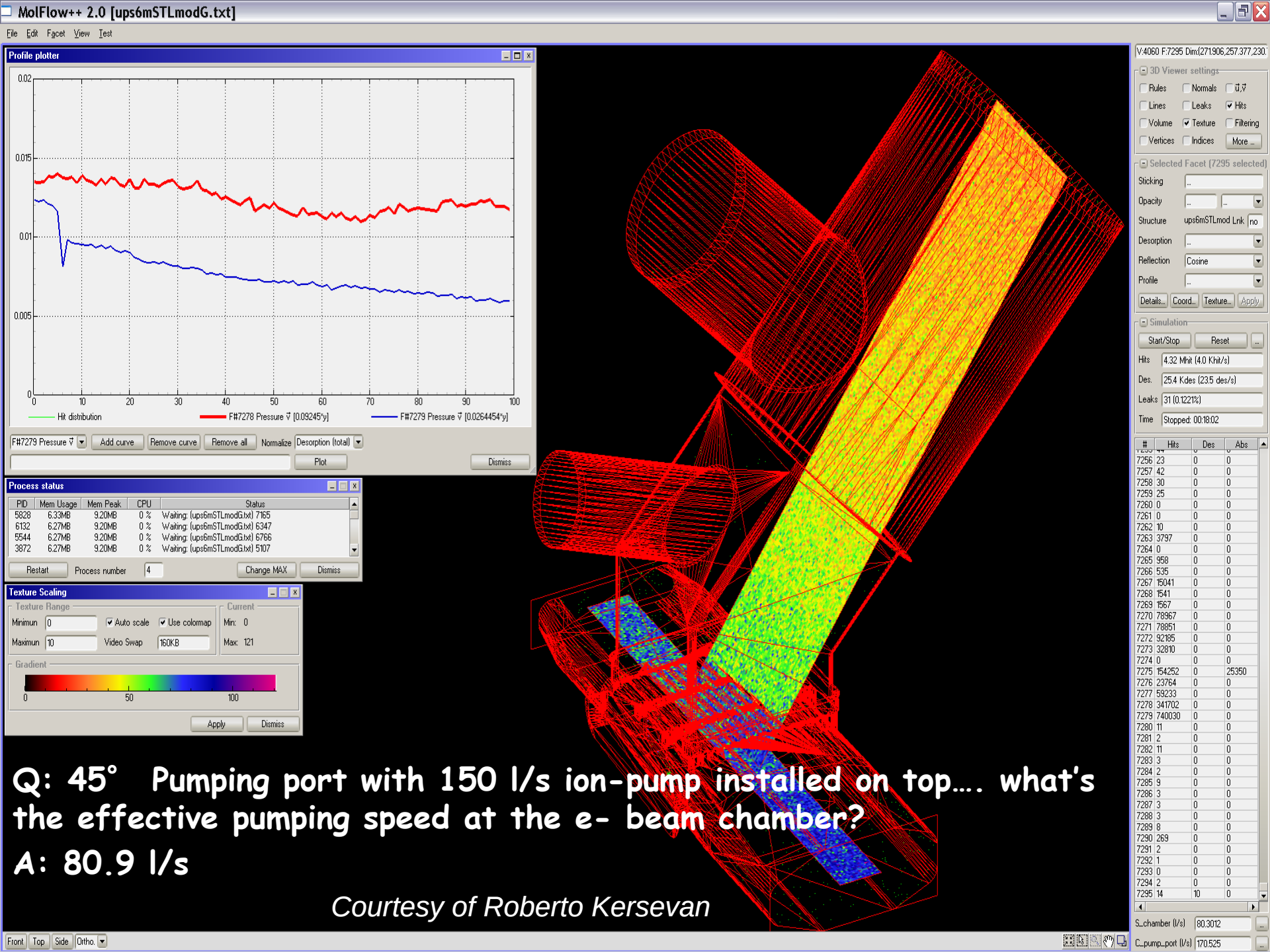

Q: 45° Pumping port with 150 l/s ion-pump installed on top…. what's the effective pumping speed at the e- beam chamber?

A: 80.9 l/s

Courtesy of Roberto Kersevan

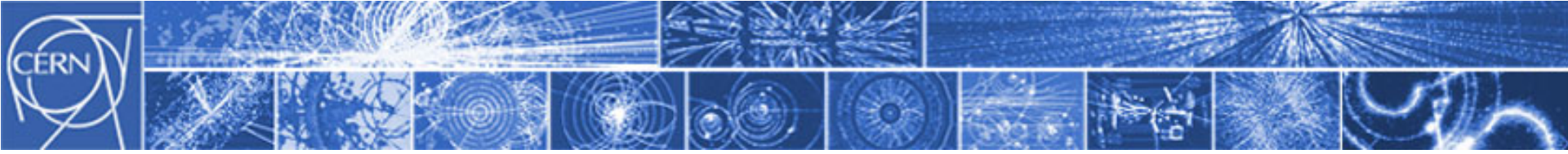

The Test Particle Monte Carlo

Summary:

Simple physical basis: rectilinear movement of molecules in UHV, cosine like desorption, molecules move independently from each other.

Flow charts for the simulation are simple: do not require expert programmers to write a code for a dedicated simulation. (to work with 3D CAD files it's another story…)

Both steady state and transient regimes can be simulated with accuracy in 3D

It is a statistical method: accuracy depends on the number of molecules tracked

Steady state simulation of 3D complex geometries, loaded from CAD files, can be done with MolFlow+ in a user friendly environment.

Transient simulation of 3D complex geometries, loaded from CAD files, can be done with FEM PROGRAMS, (slow), or with your own code...

Molflow ‘History’

- Developed since 1991 (R. Kersevan)
- Turbo Pascal, 13.000 lines of code
- Used by:
  - Diamond Light Source
  - BNL
  - Elettra
  - Alba
  - Sesame
  - ASTeC
  - FermiLab
  - Cornell
  - …
  - CERN

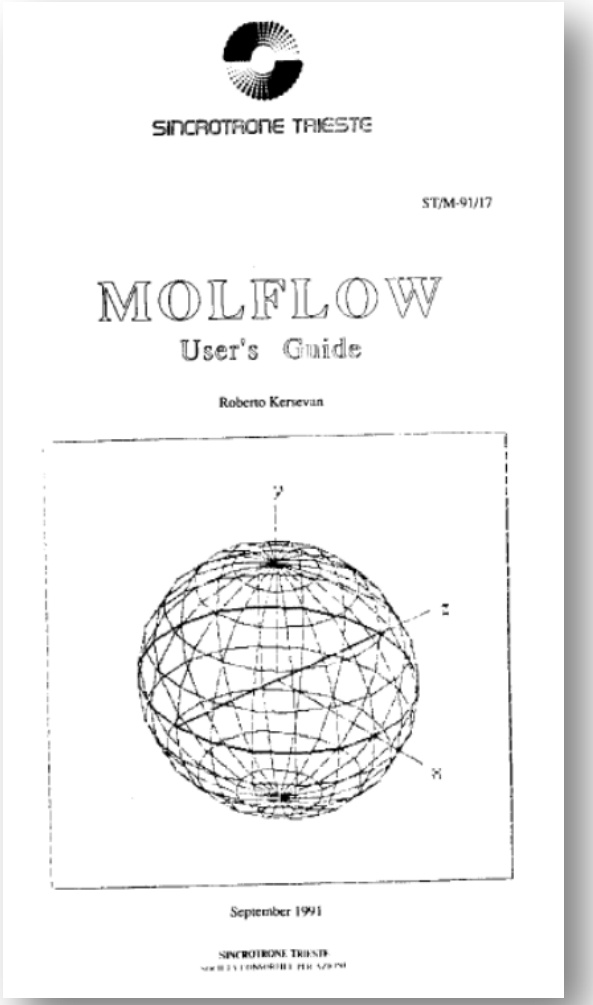

Molflow+

Synrad+

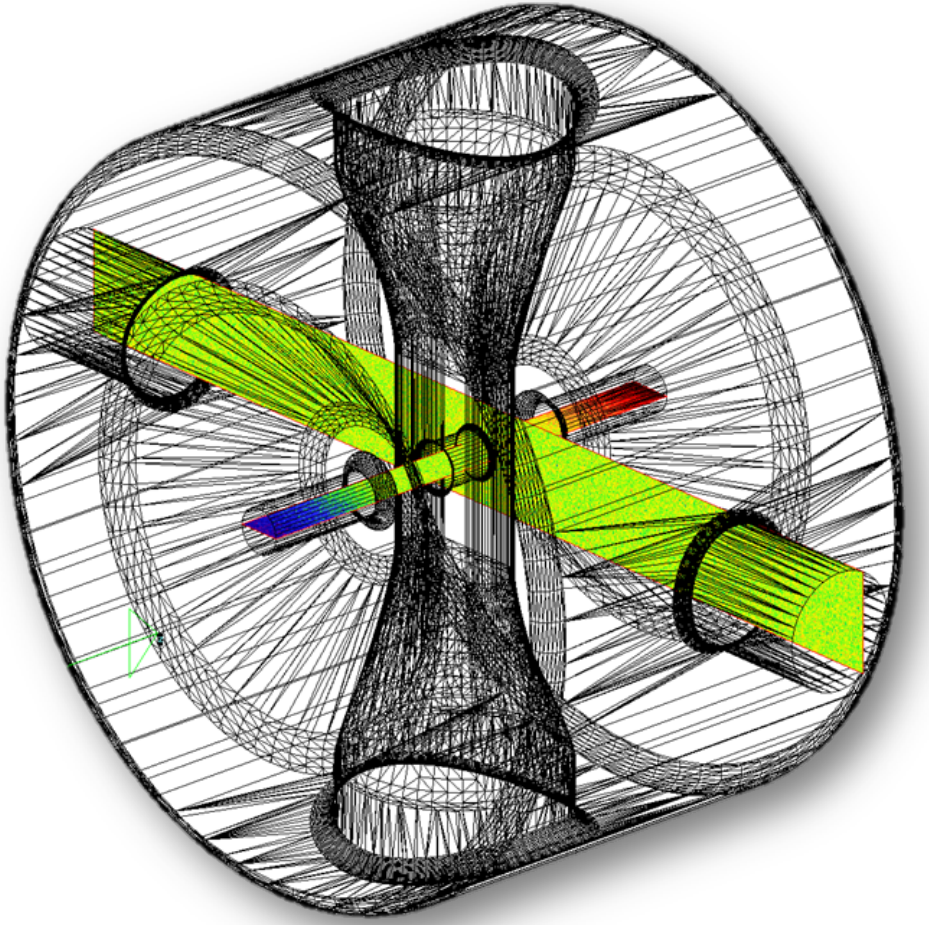

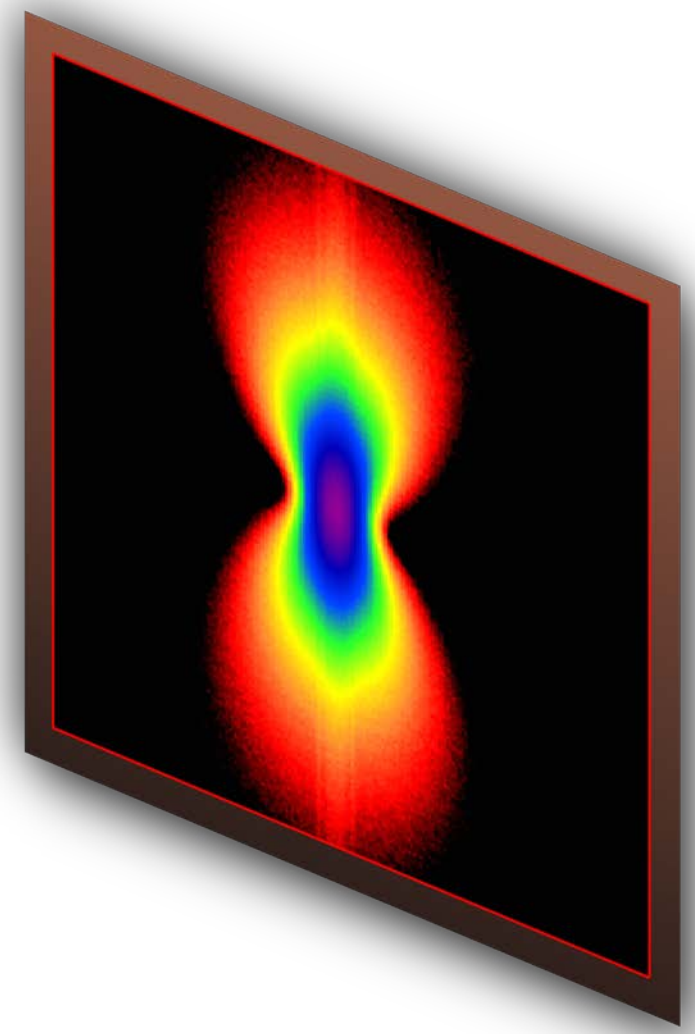

UHV

Synchroton Radiation

Molflow+

“Friendly units”

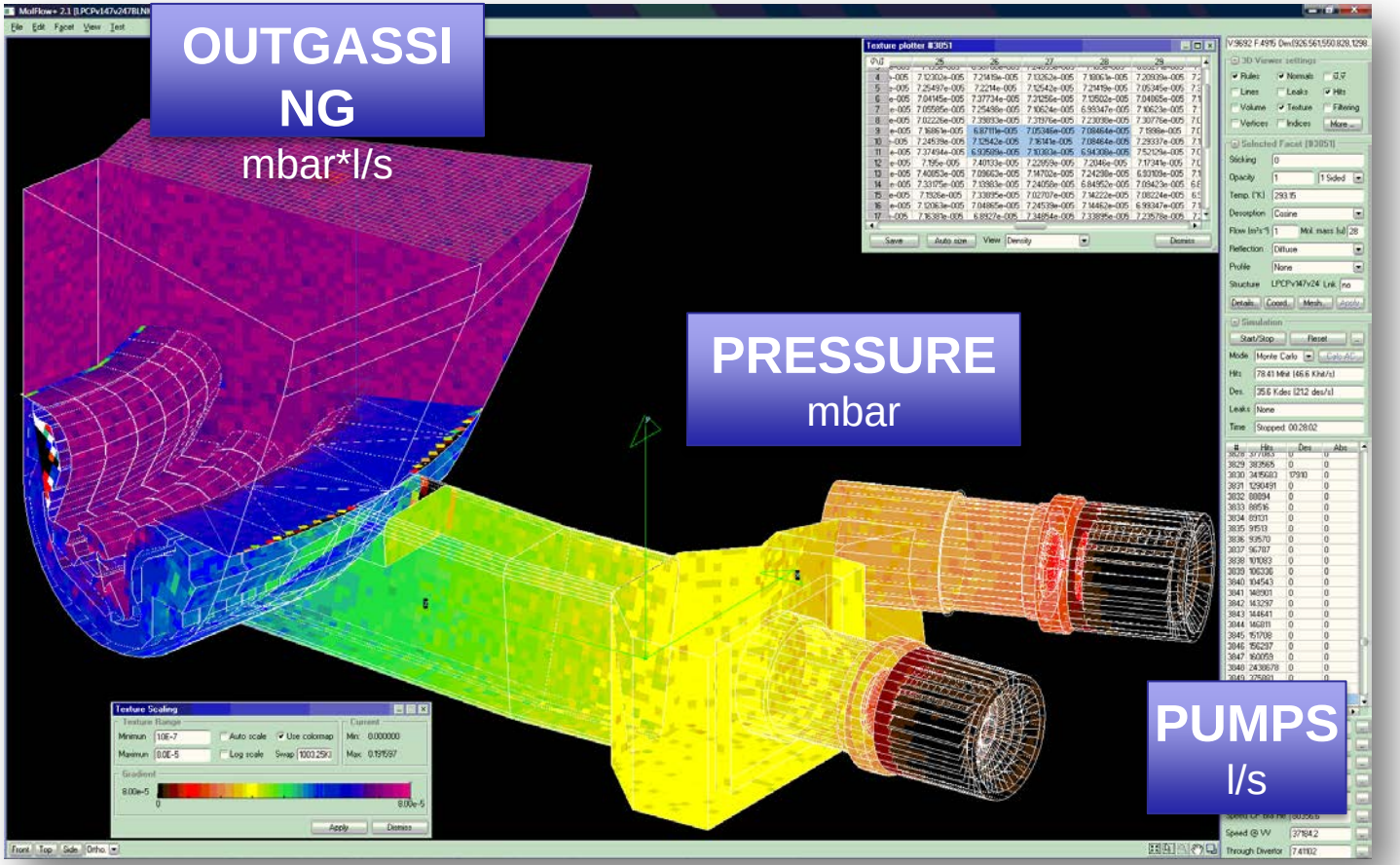

Multiple outgassing

Synrad+ AND Molflow+

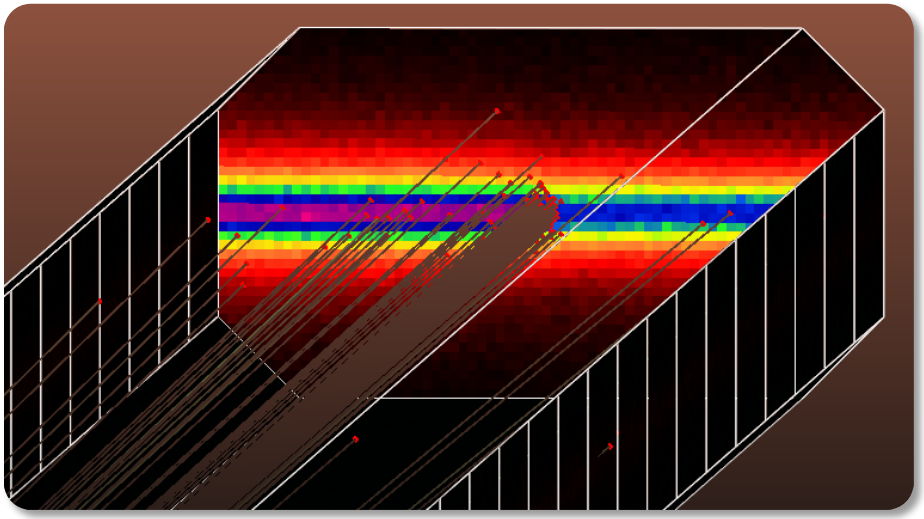

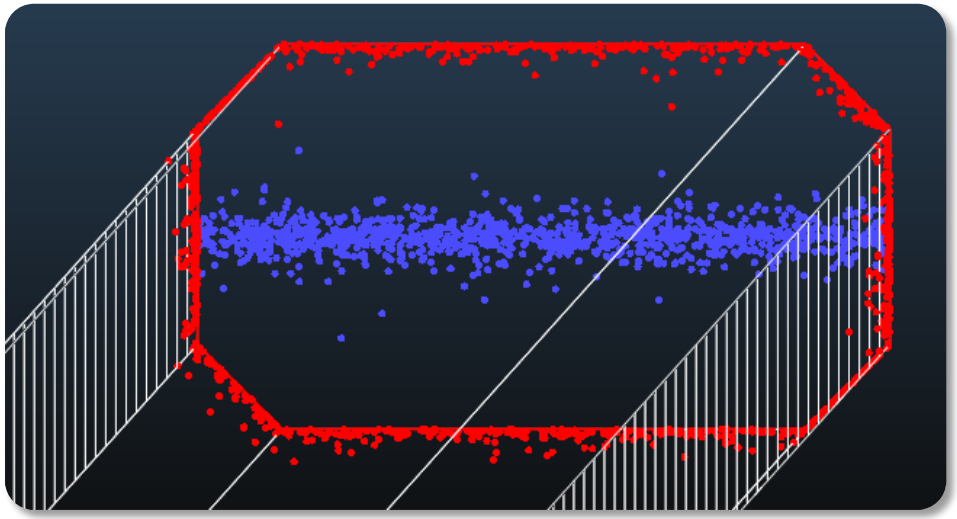

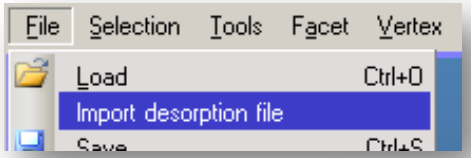

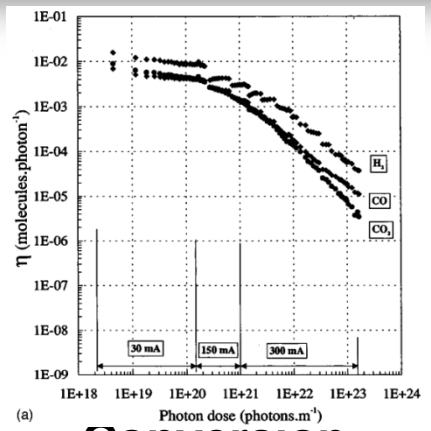

Conversion

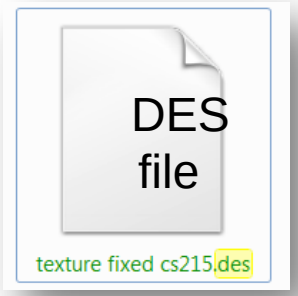

Application Example of MolFlow+

- In a recent CHESS upgrade, canted undulators with 5-mm vertical aperture beampipe were installed between a strong dipole and the SRF cavities (namely W1 and W2 SRF cavities).
- Elevated pressure level is expected near W1 during the startup of CESR with new undulator vacuum chambers at Q8W.
- The purpose of this modeling is to evaluate gas load to the W1 and W2 cavity cold surfaces during the commissioning of the A/G-line undulator chamber.
- In this modeling, only SR-induced desorption from HB7W (positron beam) is considered.

Step 1 – Construct a 'Vacuum Space' Model

- *Total length of vacuum chambers ~ 10.7 m*
- *The model includes all beampipe shapes and transitions, pumping ports, and gauge ports in interest, but excludes details such as gate valves, RF-shielded bellows, etc.*

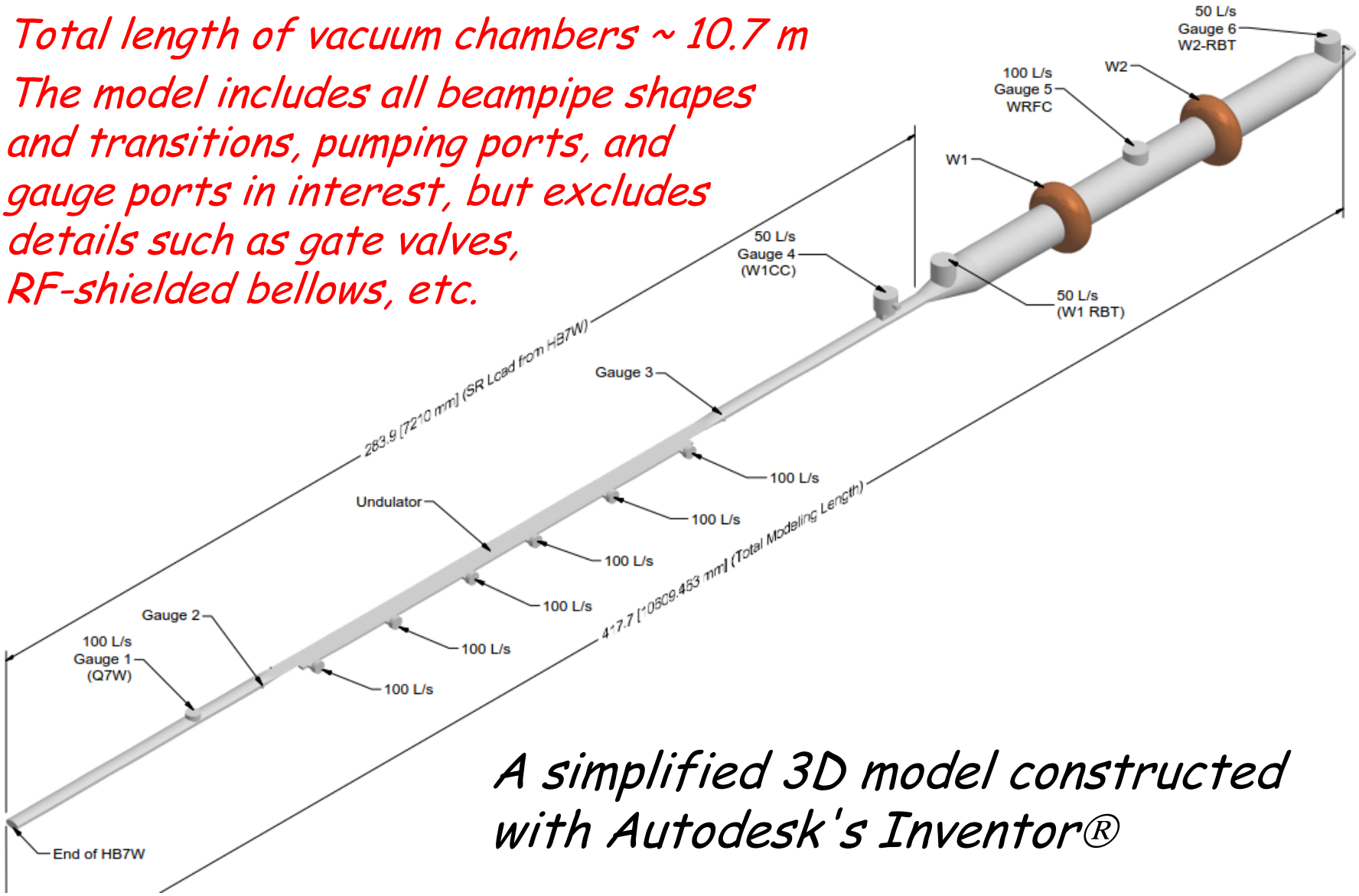

A simplified 3D model constructed with Autodesk's Inventor®

Step 2 – Import to MolFlow via STL File

- There are 8236 facets in the imported MolFlow+ model after 'collapsing' more than 50% of triangular 'tiles' into rectangular facets.
- In simulation, CO or H_2 molecules are 'desorbed' from SR stripe. The molecules are tracked until absorbed by a pump.
- Computing time is very long. It took over 4-day to 'desorb' ~10-M molecules (~12.4 Ghit).

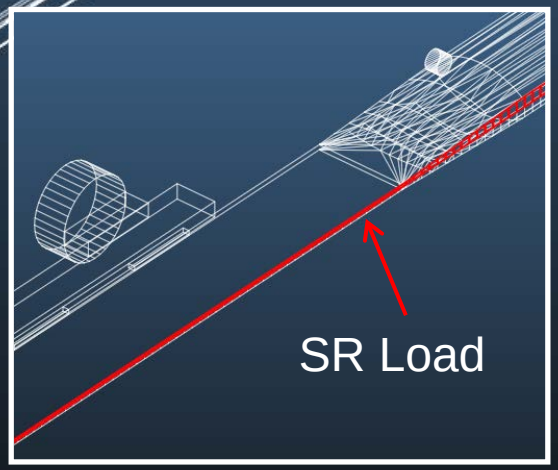

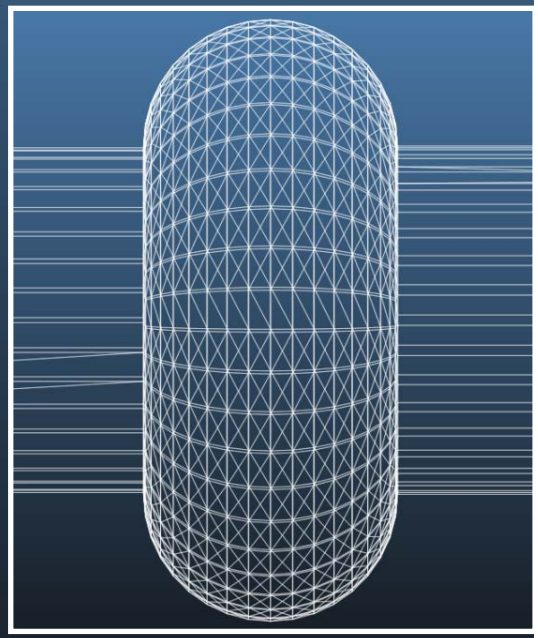

1568 facets/cavity
Sticking Coef = 1.0

Result – Relative Pressures and Profiles

	Hits	Area (cm^2)	"P"=Hits/Area	"P/W1CC"
Gauge 3 (C08W)	51690	2.84	1.82E+04	**3**
Gauge 4 (W1CC)	55291	9.19	6.02E+03	**1**
W1	54684	3131.51	17.5	**0.28%**
Gauge 5 (WRFC)	4629	166.68	27.8	**0.46%**
W2	7913	3131.51	2.5	**0.04%**
Gauge 6 (W2RBT)	3019	166.68	18.1	**0.30%**

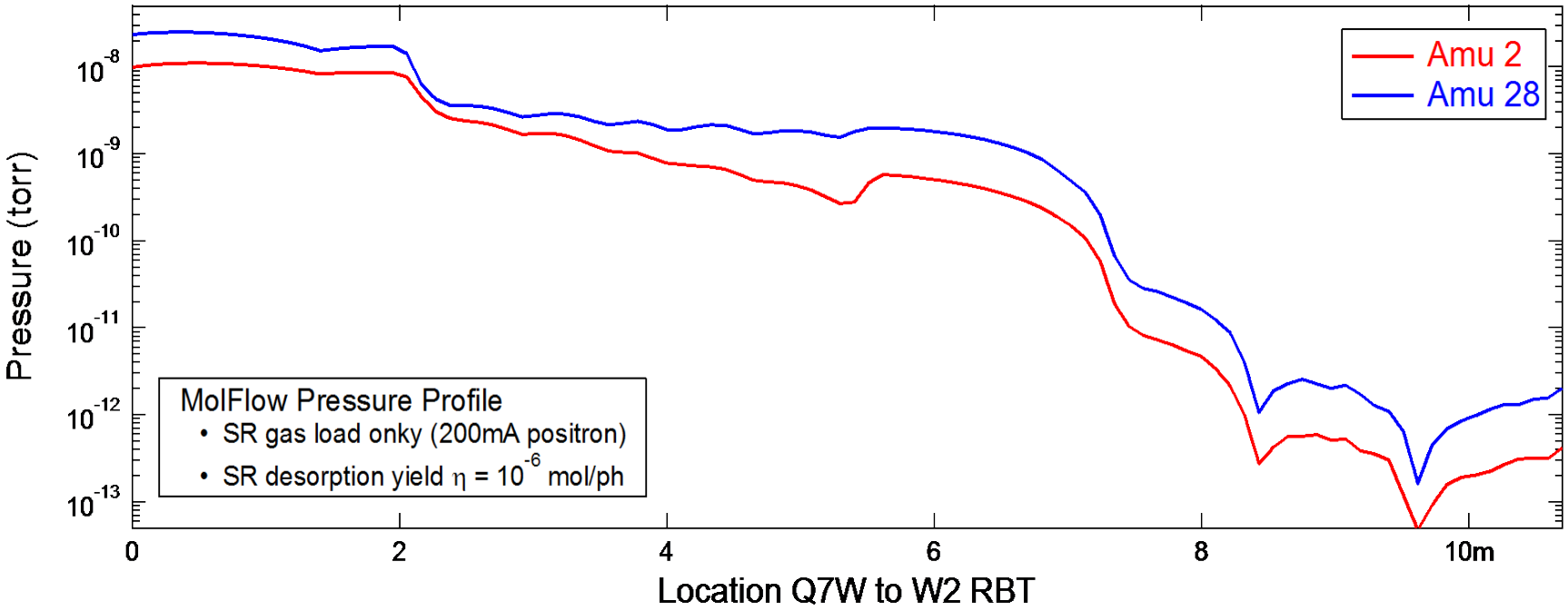

Vacuum Calculations – 1D vs. 3D

- MolFlow+ is a very useful tool for vacuum simulations of simple and complex structures.
- The program is free and the program authors at CERN usually provide timely supports.
- However, it has a relatively long and steep learning curve. It is also very time-consuming in setups. For complex and large structure, computing time can be very long (hours to days).

- On the other hand, 1D cancelations may be very useful in providing approximated pressure profiles in design studies.
- The 1D calculations are extremely fast, seconds to minutes for even very large structures.
- 1D calculations are usually easy to learn and quick to implement. The inputs (gas loads, pumping, etc.) are more flexible, thus it can be embedded in other programs for more streamlined design studies.
- The major 'defect' of all 1D calculations is related to gas flow (conductance).

Comparisons between 1D and 3D Profiles

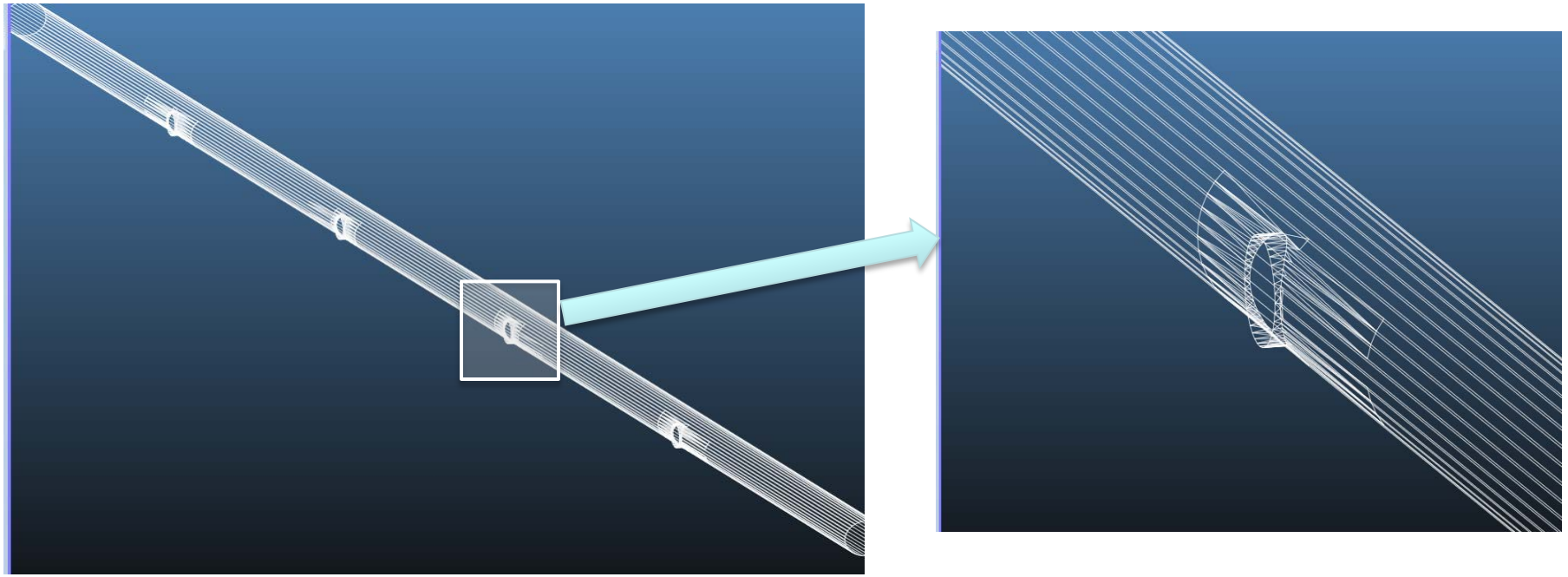

- The test structure is a round pipe (15-cm in diameter, 10-m in length), with pumping ports spaced 2-m apart.
- Pumping include 500 l/s at each port and 10 l/s·m distributed.
- Thermal outgassing from all surfaces at a rate of 10^{-11} torr·liter/s·cm^2.
- 1D profiles are calculated with The Continuity Principle of Gas Flow method, with various cell lengths.

Comparisons between 1D and 3D Profiles

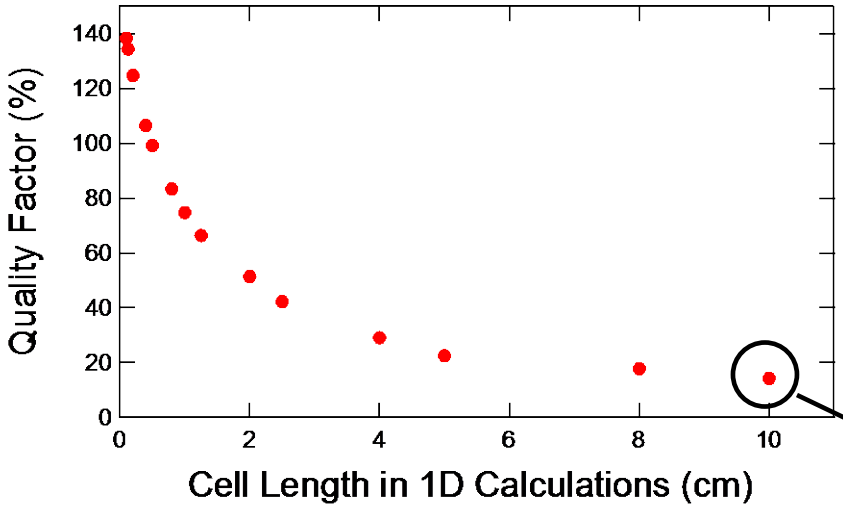

Quality Factor:
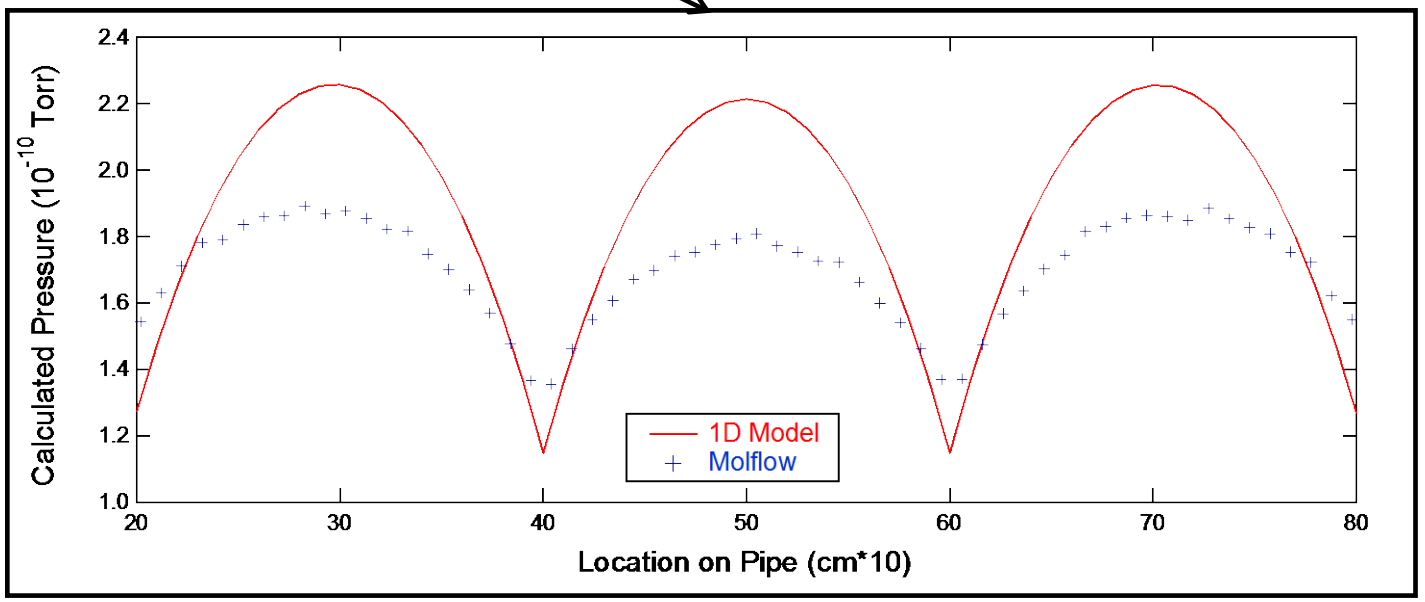
$$Q = \frac{1}{N}\sum_{i}^{N}\frac{\sqrt{\left(P_{3D}^{i} - P_{1D}^{i}\right)^{2}}}{P_{3D}^{I}} \times 100\%$$